Quick Reference

© 2003 Projetkt 4x4

Mount

REPLACES NUMBER	INDUSTRY NUMBER	DESCRIPTION	APPLICATION	POSITION
A6156	2018	MOUNT, REAR	JEEPMB,CJ2A,CJ3A, CJ3B,CJ5,CJ6	REAR, W/ 3 SPD.TRANS
638629	2040	MOUNT	ALL JEEPS WITH 134 ENGINE, 42/73	FRONT, LH & RH
638841	2039	MOUNT	JEEPSTER, JEEP TRUCK, 2X4,4X4, STATION WAGON, DELIVERYVAN	LEFT, RIGHT, REAR
801042	2010	CUSHION	CJ2A, CJ3A, CJ3B, CJ5, CJ6 FC150, FC170	TRANSFER CASE LOWER
912721		MOUNT	JEEP CJ3B, CJ-5, CJ-6 4 CYL, W/ 4SPD.	TRANSMISSION/ TRANSFER CASE
926671	2009	CUSHION	CJ2A, CJ3A, CJ3B, CJ5, CJ6, FC150, FC170	TRANSFER CASE UPPER
939993	2279	MOUNT	JEEP 'J' SERIES, 4WD TRUCK W/ 230 1963/73	FRONT, LH & RH
J0939995		MOUNT	JEEP CJ5, CJ6 W/ V6-225 ENG, T86AA	REAR, TRANSFER CASE & TRANSMISSION
J1370910	2693	MOUNT	JEEP CJs 72/86, WAGONEER /64 W/ 230, GLADIATOR W/ 304, 360, GM PRODUCTS 65/82	TRANSMISSION/ TRANSFER CASE
J1369788		MOUNT	JEEP CJ5, CJ6, C101 W/ V6-225	FRONTRIGHT
J1371313		MOUNT	JEEP CJ5, CJ6, C101 W/ V6-225	FRONTLEFT
J3173681	2280	MOUNT	JEEP CJ5, CJ6, JEEPSTER W/ 232/258 1962/77	FRONT, LH & RH
J3183855	2317	MOUNT	AMC, JAVELIN, RAMBLER	REAR (TRANS)
J3186107	2351	MOUNT	AMC V8, 72/78 JEEPV8, 71/85	FRONT, LH & RH
J3235712	2453	MOUNT	AMC 232, 258 71/83	REAR (TRANS)
J3242711	2571	MOUNT	JEEP XJ, MJ 84/90, 91/96 W/2.5	FRONT RH ONLY
J5351784	n/a	BRACKET MOUNT	JEEP'J' SERIES 74/84 W/ 258	W/ FRONTRH MOUNT

© 2003 Projekt 4x4

Mount

REPLACES NUMBER	INDUSTRY NUMBER	DESCRIPTION	APPLICATION	POSITION
J5351785	n/a	BRACKET MOUNT	JEEP'J' SERIES 74/84 W/ 258	W/ FRONTLH MOUNT
J5361829	2446	MOUNT	JEEP CJ5, CJ7, CJ8 W/ GM 151	FRONT, LH & RH
J8125115	2281	MOUNT	JEEP 68/73, BUICK 68/81, PONT75/76, 78/80, GM TRUCK 63/72	FRONT, LH & RH
J8128488	2330	MOUNT	JEEP CJS, 74/86 W/258, JEEP'J' SERIES 74/91 W/258	FRONT, LH & RH
52000074	2569	MOUNT	JEEP XJ, MJ 84/93 W/2.5, YJ 91/96 W/2.5, (YJ 87/90 LH & RH)	FRONT LH ONLY
52000141	2569	MOUNT	JEEP XJ, MJ 84/86 W/ 2.8 V6	FRONT LH & RH
52000619		BUSHING	JEEP XJ, MJ, 1984/96 2.1 DIESEL, 1984/93 W/ 2.5	W/ ENGINE DAMPER SHOCK ASSY.
52001180	2570	MOUNT	JEEP XJ, MJ 84/90 W/ 2.1, 84/96 W/ 2.5	REAR, TRANSMISSION SUPPORT
52002334	2625	MOUNT	JEEP XJ, MJ 87/90 2.5, 87/96 4.0	REAR AUTOMATIC TRANSMISSION MOUNT
52002625	2628	MOUNT	JEEP YJ, 4 CYL, 6 CYL. 1987/96	ENGINE REAR
52006726		MOUNT	JEEP XJ, MJ 1985/96 W/ 2.1 DIESEL	FRONT, LEFT& RIGHT
52007289		MOUNT	JEEP XJ, MJ 1991 W/ 2.5	RIGHTFRONT
52007394		MOUNT	JEEP XJ, MJ 1992/ W/ 2.5 ENG	LEFTFRONT
52017534		MOUNT	JEEP YJ, 1992/96	LEFTFRONT
52017863		MOUNT	JEEP ZJ, 1993 W/ 4.0	ENGINE REAR
52018096		BRACKETASSY.	JEEP ZJ, 1993/96 W/ MANUAL TRANS.	ENGINE REAR/ TRANSMISSION
52018280		MOUNT	JEEP ZJ, 1993/95, 52058502 1996/98 W/ 4.0	FRONTRIGHT

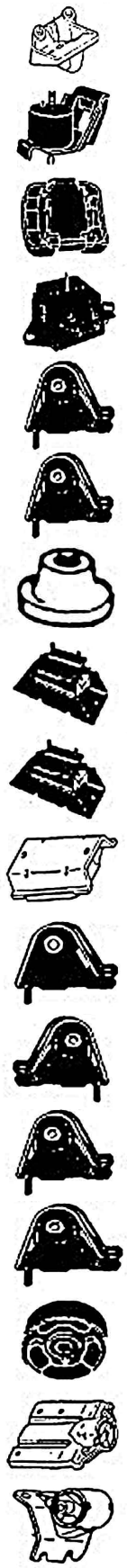

© 2003 Projekt 4x4

Mount

	REPLACES NUMBER	INDUSTRY NUMBER	DESCRIPTION	APPLICATION	POSITION
	52018281		MOUNT	JEEP ZJ, 1993/95, 52058503 1996/98 W/ 4.0	FRONTLEFT
	52018857		MOUNT & BRACKET	JEEP ZJ, 1993/95 4.0	ENGINE REAR
	52019276		MOUNT	JEEP WRANGLER TJ 1997/ W/ 2.5	FRONT, LEFT& RIGHT
	52019278		MOUNT	JEEP WRANGLER TJ 1997/ W/ 4.0	FRONT, LEFT& RIGHT
	52040267	2572	MOUNT	JEEP YJ, 87/96, XJ W/4.0 87/92 RH, 87/96 LH	FRONT, LH & RH +LH only
	52058504		MOUNT	JEEP ZJ, 1996/98, 52058500 1993-95 w/5.2L, 5.9L	RIGHTFRONT
	52058505		MOUNT	JEEP ZJ, 1996/98, 52058501 1993-95 w/5.2L, 5.9L	LEFTFRONT
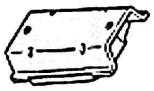	52058551		MOUNT	JEEP WRANGLER TJ 1997/ 2.5, 4.0	ENGINE REAR
	52058605		MOUNT	JEEP ZJ, 1993/95 W/ 5.2	ENGINE REAR / EXHAUSTHANGER
	83505567		MOUNTASSY.	JEEP XJ, 87/90 w/ 4.0 & Manual Trans.	ENGINE REAR, TRANSMISSION

Axle Bumpers

	J5355483		BUMPER,AXLE	JEEP CJ-S 76/86, 'J'Series 1976/91	FRONT & REAR AXLES
	52002393		CUSHION, 4 JOUNCE (104mm)	JEEP XJ, MJ 1986/96	REAR SPRING / AXLE
	52002658		BUMPER, AXLE JOUNCE,	JEEP YJ 1987/ 96	REAR SPRING /AXLE
	52040007		BUMPER, FRAME	JEEP YJ, 1987/96 SHORT	FRONTAXLE
	52040426		BUMPER, FRAME	JEEP YJ, 1987/96 LONG	FRONTAXLE

© 2003 Projekt 4x4

REAR AXLE

RPLPART #	INDUSTRY#	SIDE	POSITION	MODEL	TYPE	LENGTH	SPLINE	APPLICATION
A901	817L	RIGHT	REAR	Full Floating	FLANGED	22"	10	MB, CJ-2A
A902	817R	LEFT	REAR	Full Floating	FLANGED	30-5/8"	10	MB, CJ-2A
640968	364L	LEFT	REAR	Semi Floating	TAPER	29-11/16"	10	CJ-2A, CJ3A, CJ-3B, CJ-5, CJ-6
640969	364R	RIGHT	REAR	Semi Floating	TAPER	21-7/16"	10	CJ-2A, CJ3A, CJ-3B, CJ-5, CJ-6
909404	2025L	LEFT	REAR	Spicer 44	TAPER	31-5/32"	19	475 4WD UTILITYWAGON, 6-226 4WD UTILITYWAGON
909405	2025R	RIGHT	REAR	Spicer 44	TAPER	28-23/32"	19	475 4WD UTILITYWAGON, 6-226 4WD UTILITYWAGON
912625	2037L	LEFT	REAR	Spicer 44	TAPER	29-11/16"	19	CJ3B, CJ5, CJ6, CJ6A, FC150
912626	2037R	RIGHT	REAR	Spicer 44	TAPER	21-7/16"	19	CJ3B, CJ5, CJ6, CJ6A, FC150
935073	2113L	LEFT	REAR	Spicer 44-1	TAPER	33-1/8"	19	JEEP J100, J200, J300, J164, 4X4 Sta.Wag.
935074	2113R	RIGHT	REAR	Spicer 44-1	TAPER	26-11/16"	19	JEEP J100, J200, J300, J164, 4X4 Sta.Wag.
994252	26765-5X	L& R	REAR	Model 44	FLANGED	24-3/4"	30	CJ5, CJ6, DJ5, DJ6, Jeepster /73 W/ 232, 258, 304 Eng.
3235806	3235806	RIGHT	REAR	AMC Model 20	FLANGED	29-1/4"	29	Full size JEEPWagoneer, Cherokee w/ 12 bolt cover, 80/86
3235807	3235807	LEFT	REAR	AMC Model 20	FLANGED	27-3/4"	29	Full size JEEPWagoneer, Cherokee w/ 12 bolt cover, 80/86
3235808	3235808	RIGHT	REAR	AMC Model 20	FLANGED	32-1/8"	29	JEEP J-10, J-20 Pickups w/ 12 bolt cover, 80/86
3235809	3235809	LEFT	REAR	AMC Model 20	FLANGED	31-3/4"	29	JEEP J-10, J-20 Pickups w/ 12 bolt cover, 80/86
4713192	74356-1X	RIGHT	REAR	Model 35	FLANGED	29"	27	JEEP YJ, XJ, ZJ, TJ 1992 / w/ Rear Drum Brakes
4713193	74356-2X	LEFT	REAR	Model 35	FLANGED	30-5/8"	27	JEEP YJ, XJ, ZJ, TJ 1992 / w/ Rear Drum Brakes
4762194	74789-1X	RIGHT	REAR	Model 35	FLANGED	29"	27	JEEP XJ, ZJ 1994/ w/ Rear Disc brakes
4762195	74789-2X	LEFT	REAR	Model 35	FLANGED	30-1/2"	27	JEEP XJ, ZJ 1994/ w/ Rear Disc brakes
4856332	74871-1X	RIGHT	REAR	Model 44	FLANGED	29.26"	30	JEEP ZJ 1994 / With Dana Model 44 axle
4856333	74871-2X	LEFT	REAR	Model 44	FLANGED	30.25"	30	JEEP ZJ 1994 / With Dana Model 44 axle
5252948	73879-1X	RIGHT	REAR	Model 35	FLANGED	29.04"	27	JEEP YJ, XJ 1990/91 w/ ABS
5252949	73879-2X	LEFT	REAR	Model 35	FLANGED	30.54"	27	JEEP YJ, XJ 1990/91 w/ ABS
5252956	73624-1X	RIGHT	REAR	Model 35	FLANGED	29.04"	27	JEEP YJ, XJ 1990/ 91 w/o ABS
5252957	73624-2X	LEFT	REAR	Model 35	FLANGED	30.54"	27	JEEP YJ, XJ 1990/ 91 w/o ABS
8127070	8127070	RIGHT	REAR	AMC Model 20	TAPER	26-5/16"	29	JEEP CJ5 76/83, CJ7 76/81 Less Quadratrac
8127070K	8127070K	RIGHT	REAR	AMC Model 20	TAPER	26-5/16"	29	Includes hub, bearings, seals, axle nut,washer, & key
8127071	8127071	LEFT	REAR	AMC Model 20	TAPER	29-1/4"	29	JEEP CJ5 76/83, CJ7 76/81 Less Quadratrac
8127071K	8127071K	LEFT	REAR	AMC Model 20	TAPER	29-1/4"	29	Includes hub, bearings, seals, axle nut, washer, & key
8127079	8127079	LEFT	REAR	AMC Model 20	TAPER	33-1/2"	29	JEEP CJ5, CJ7 76/79 With Quadratrac
8127079K	8127079K	LEFT	REAR	AMC Model 20	TAPER	33-1/2"	29	Includes hub, bearings, seals, axle nut, washer, & key

© 2003 Projekt 4x4

8127081	8127081	RIGHT	REAR	AMC Model 20	TAPER	22"	29	JEEP CJ5, CJ7 76/79 With Quadratrac
8127081K	8127081K	RIGHT	REAR	AMC Model 20	TAPER	22"	29	Includes hub, bearings, seals, axle nut, washer, & key
8133885	8133885	LEFT	REAR	AMC Model 20	TAPER	28-9/16"	29	JEEP CJ7, CJ8 82/86
8133885K	8133885K	LEFT	REAR	AMC Model 20	TAPER	28-9/16"	29	Includes hub, bearings, seals, axle nut, washer, & key
8133886	8133886	RIGHT	REAR	AMC Model 20	TAPER	31-9/16"	29	JEEP CJ7, CJ8 82/86
8133886K	8133886K	RIGHT	REAR	AMC Model 20	TAPER	31-9/16"	29	Includes hub, bearings, seals, axle nut, washer, & key
53000403	N/A	LEFT	REAR	Model 35	FLANGED	30.35"	27	JEEP YJ 87/89, XJ 84/89 (axle shaft only)
53000404	N/A	RIGHT	REAR	Model 35	FLANGED	28.85"	27	JEEP YJ 87/89, XJ 84/89 (axle shaft only)
53008134	53008134	L& R	REAR	Chrysler 8-1/4"	FLANGED	29.75"	27	JEEP XJ 91/94 W/ Chrysler 8 1/4" axle
53008134K	N/A	L& R	REAR	Chrysler 8-1/4"	FLANGED	29.75"	27	Same as above, but includes seals & bearings.
83502882	72912-2X	RIGHT	REAR	Model 35	FLANGED	28.85"	27	JEEP YJ, XJ /89 (includes bearings, seal, retainer)
83502883	72912-1X	LEFT	REAR	Model 35	FLANGED	30.35"	27	JEEP YJ, XJ /89 (includes bearings, seal, retainer)

FRONT AXLE

RPL. PART#	INDUSTRY#	SIDE	POSITION	MODEL	TYPE	LENGTH	SPLINE	APPLICATION
909459	20623-1X	LEFT	FRONT	25, 27AF	U-JOINT	34-7/16"	27/ 27	MB, M38, M38A1, CJ2A, CJ3A, CJ3B, CJ5,CJ-6
909460	20623-2X	RIGHT	FRONT	25, 27AF	U-JOINT	21-9/16"	27 / 27	MB, M38, M38A1, CJ2A, CJ3A, CJ3B, CJ5,CJ-6
4720380	73918-2X	RIGHT	FRONT	Model 30	C.V. Joint	38-9/16"	27 / 27	JEEP ZJ 1993/ w/ C.V. Joint
4720381	73918-1X	LEFT	FRONT	Model 30	C.V. Joint	22-11/16"	27 / 27	JEEP ZJ 1993/ w/ C.V. Joint
4740970	75590-2X	RIGHT	FRONT	Model 30	Carden U-J	38-3/8"	27 / 27	JEEP XJ 91/96 w/ ABS, ZJ 93/ w/Carden U-Joint axle
4740971	75590-1X	LEFT	FRONT	Model 30	Carden U-J	23"	27 / 27	JEEP XJ 91/96 w/ ABS, ZJ 93/ w/Carden U-Joint axle
4741033	75589-1X	LEFT	FRONT	Model 30	U-JOINT	22"	15 / 27	JEEP YJ, 1991/96 w/ ABS
4874302	75814-2X	RIGHT	FRONT	Model 30	U-JOINT	38-1/2"	27 / 27	JEEP YJ, XJ, MJ, 87/97 w/o ABS, w/ disconnect axle
4874303	75814-1X	LEFT	FRONT	Model 30	U-JOINT	22-5/8"	27 / 27	JEEP YJ, XJ, MJ, 87/97 w/o ABS, w/ disconnect axle
4874306	75815-2X	RIGHT	FRONT	Model 30	U-JOINT	38-3/8"	27 / 27	JEEP XJ,YJ, ZJ, TJ 97/98 W/ ABS
4874307	75815-1X	LEFT	FRONT	Model 30	U-JOINT	22-9/16"	27 / 27	JEEP XJ,YJ, ZJ, TJ 97/98 W/ ABS
5252145	75588-1X	RIGHT	FRONT	Model 30	U-JOINT	22"	15 / 27	JEEP XJ, 1984 / 97 w/o ABS , w/disconnect axle
5252586	73708-2X	RIGHT	FRONT	Model 30	U-JOINT	38-3/4"	27 / 27	JEEP XJ,MJ, 90/91 w/ ABS, w/o disconnect axle
5252587	74286-1X	LEFT	FRONT	Model 30	U-JOINT	22-5/8"	27 / 27	JEEP XJ,MJ, 90/91 w/ ABS, w/o disconnect axle
8127598	28179-3X	RIGHT	FRONT	Model 30	U-JOINT	22-7/8"	27 / 27	JEEP CJ-5 77/83, CJ-7 77/81
8127599	28179-4X	LEFT	FRONT	Model 30	U-JOINT	35-3/4"	27 / 27	JEEP CJ-5 77/83, CJ-7 77/81
8134293	28179-8X	LEFT	FRONT	Model 30	U-JOINT	37-11/32"	27 / 27	JEEP CJ-7 82/86
8134294	28179-7X	RIGHT	FRONT	Model 30	U-JOINT	24-9/16"	27 / 27	JEEP CJ-7 82/86

© 2003 Projekt 4x4

Tie Rod

REPLACES PART #	INDUSTRY #	DESCRIPTION	APPLICATION
10339	10339	BALLJOINT	FORD, 1989/96 F150, 250, 350 4WD
DS-1001	DS-1001	TIE ROD	FORD. 1980/85, 6, F250, F350 4WD
DS-1002	DS-1002	TIE ROD END	FORD, 1980/85, 6 ,F250, F350 4WD
DS-893	DS-893	TIE ROD	CHEV, GMC 1976/89 1/2, 3/4 TON 4WD
A1116		PITMAN ARM	JEEP CJ-2A, CJ-3A, CJ3B, CJ-5 CJ-6 (4)
A8838	123101 (40-1/2")	TUBE & WORM	MB, CJ2A
J0640178	ES140L	TIE ROD END	JEEP CJ-S, 1945/73
647693	123271 (41-1/2")	TUBE & WORM	CJ-3A, CJ-3B, CJ-5, CJ-6
807480	123001 (42-3/8")	TUBE & WORM	M38-A1, CJ-5, CJ-6
J0809190	ES258L	TIE ROD END	JEEP M38, M38A1, CHEV 60/66, IHC 57/65, DODGE 57/65 1/2, 3/4 Ton 4WD
J0809191	ES258R	TIE ROD END	JEEP M38, M38A1, CHEV 60/66, IHC 57/65, DODGE 57/65 1/2, 3/4 Ton 4WD
J0920535	ES324R	TIE ROD END	JEEP MB, CJ2A, CJ3A, CJ3B, CJ5, CJ6, CJ-7, CJ-8, 4WD WAGONS, FC-170
J0920536	ES313R	TIE ROD END	JEEPSTER V6, FC150
J0921317	ES140R	TIE ROD END	JEEP MB, CJ2A, CJ3A, CJ3B, CJ5, CJ6, CJ-7, CJ-8, 4WD WAGONS, FC-170
J0932191	ES354L	TIE ROD END	JEEP WAGONEER, GLADIATOR 1963/73, DODGE 63/68
J0932192	ES354R	TIE ROD END	JEEP WAGONEER, GLADIATOR 1963/69, DODGE 63/68, IHC 1969
938195	123001(41-11/16")	TUBE & WORM	CJ-5, CJ-6
J0991744	DS911	TIE ROD	JEEP CJ-S, 1972/86
J0999200	DS892	TIE ROD	JEEP TRUCK, 1963-73 (32.34")
J0999415		PITMAN ARM	JEEP CJ'S /1975 LESS POWER STEERING.
J0999416		PITMAN ARM	JEEP CJ'S /1975 w/ POWER STEERING.
J3200671	ES2004S	TUBE,Adjusting	JEEP CJ-5, CJ-6, CJ-7/86, JEEPSTER
J3209636	DS-757	TIE ROD END	AMC CONCORD, SPIRIT, HORNET, GREMLIN
J3215775	ES368L	TIE ROD	AMC CONCORD, SPIRIT, HORNET, GREMLIN
J3231635	18655N	PITMAN ARM	AMC (EXCEPTPACER) w/ POWER STEERING.
J3231636	18773	PITMAN ARM	AMC CONCORD, SPIRIT, w/o POWER STEERING.
J3235507	ES2107R	TIE ROD END	AMC EAGLE, SX-4 1980/
J3235661	ES2106L	TIE ROD END	AMC EAGLE, SX-4 1980/
J3241837	18794	IDLER ARM	ALL AMC 1982/
J5350570		TIE ROD	JEEP CJ'S RHD 1973/86 (20.83")
J5350589	DS924S	TUBE, TIE ROD	JEEP CJ, 1972/81, (40-1/2")
J5352278		PITMAN ARM	JEEP 'J' SERIES, 1979/91
J5356104		PITMAN ARM	JEEP CJ-5, CJ-6, CJ-7, CJ-8 1976/86 w/ POWER STEERING
J5356106		PITMAN ARM	JEEP CJ-5, CJ-6, CJ-7, CJ-8 1976/86 w/o POWER STEERING
J8122495	10252	BALLJOINT, U	JEEP 72/90, FORD 71/79, CHEV, GMC 70/90, DODGE 4WD 72/90
J8122496	10253	BALLJOINT, L	JEEP 72/90, FORD 71/79, CHEV, GMC 70/90, DODGE 4WD 72/90
J8123315	DS897	TIE ROD END	JEEP 'J' SERIES, 1974/91
J8123316	DS896	TIE ROD END	JEEP 'J' SERIES, 1974/91
J8124816	DS895	TIE ROD	JEEP 'J' SERIES 1974/91 (46.50")
J8124817	ES452L	TIE ROD END	JEEP 'J' SERIES, 1974/91
J8124823	DS915	TIE ROD	JEEP 'J' SERIES, 1974/90
J8128409	ES2044R	TIE ROD	AMC PACER /1980
J8130419	10283	BALLJOINT	AMC PACER 1975/80
J8134290	DS1075S	TUBE, TIE ROD	JEEP CJ-S, 1982/86 (43-3/4")
J8134350	DS1070	TIE ROD ASSY.	JEEP CJ-7, CJ-8, 1982/86
J8136624	18741	IDLER ARM	AMC HORNET, GREMLIN 1974/76
J8136632	18714	IDLER ARM	AMC MATADOR, JAVELIN, AMBASSADOR 1974/
T1462540		BALLJOINT	RENAULTALLIANCE (7701349437)
52000596	DS1045S	TUBE,TIE ROD	JEEP XJ, 1984/90 (36.50")
52000598	ES2221L	TIE ROD END	JEEP XJ, YJ 1984/90
52000599	ES2223R	TIE ROD END	JEEP XJ, YJ 1984/90
52000601	DS1046	TIE ROD	JEEP XJ, 1984/90
52000608	ES2222L	TIE ROD END	JEEP XJ, 1984/90
52000615		PITMAN ARM	JEEP XJ, MJ 1984/93 w/o POWER STEERING
52000616		PITMAN ARM	JEEP XJ, MJ 1984/93 w/ POWER STEERING
52001094		LINK,Rear Stabil.	JEEP XJ, 1984/96
52002540	DS1050	TIE ROD	JEEP WRANGLER, 1987/90
52002541	ES2322L	TIE ROD END	JEEP YJ, 1987/90
52002547		BAR, Tie Rod Adj	JEEP YJ, 1987/96 (ON DS-1237, DS-1050)
52002700	DS1051S	TUBE, TIE ROD	JEEP YJ, 1987/90 (25-7/8')
52003918	DS1147	TRACK BAR	JEEP XJ, 1984/90

© 2003 Projekt 4x4

Tie Rod

REPLACES PART #	INDUSTRY #	DESCRIPTION	APPLICATION
52005642		TRACK BAR, Rear	JEEP GRAND CHEROKEE, 1993/95
52005738	DS1311	TIE ROD	JEEP GRAND CHEROKEE 93/97 4.0
52005739	ES3096	TIE ROD END	JEEP YJ, 91/96, XJ 91/96, ZJ 93/96
52005740	ES3095	TIE ROD END	JEEP YJ 91/96, XJ 91/, ZJ 91/ w/4.0, TJ 97
52005741	ES3094	TIE ROD END	JEEP YJ 87/96, XJ 91/, ZJ 93/ w/4.0, TJ 97
52006592	DS1238	TIE ROD ASSY.	JEEP XJ, MJ 1991/96
52006602	DS1237	TIE ROD	JEEP YJ, 1991/96
52007118	DS1235	TRAC BAR	JEEP XJ, MJ 1991/96
52037849		LINK, Frt. Stabil.	JEEP XJ, 91/96, MJ 91/93, ZJ 93/95
52037994	DS1310	TIE ROD	JEEP GRAND CHEROKEE, 1993/97 5.2
52037996	DS1312	TIE ROD	JEEP GRAND CHEROKEE, 1993/97 5.2
52038337		PITMAN ARM	JEEP TJ, 1997 LHD W/ POWER STEERING
52038338		PITMAN ARM	JEEP TJ, 1997 RIGHT HAND DRIVE
52040110		PITMAN ARM	JEEP YJ 1987/96 w/o POWER STEERING
52040112		PITMAN ARM	JEEP YJ 1987/96 w/ POWER STEERING
52040403		TRACK BAR, Front	JEEP WRANGLER, 1987/96
52040404		TRACK BAR, Rear	JEEP WRANGLER, 1987/96
52087674	DS1326S	TUBE, TIE ROD	JEEP XJ, ZJ 91/96 W/ 4.0 (34.50")
52087771		LINK, Stabilizer	JEEP TJ, 1997 FRONT
52087863		LINK, Rear Stabil.	JEEP TJ, 1997/98
52087878		TRACK BAR, Rear	JEEP TJ, 1997/98
52087883		PITMAN ARM	JEEP TJ, 1997/9 w/o POWER STEERING.
52088175		TRACK BAR, Rear	JEEP TJ, RIGHT HAND DRIVE 1997/98
52088430		TRACK BAR	JEEP TJ, 1997/98
52088432		TRACK BAR, RHD	JEEP TJ, 1997/98 w/ RIGHT HAND DRIVE
83500202	10458 +10459	BALLJOINTKIT	JEEP YJ, 87/, XJ 84/, ZJ 93/ , TJ 97/

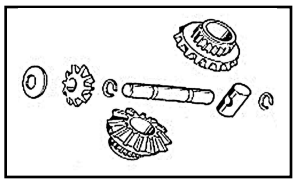

DIFFERENTIAL GEAR SET

REPLACES PART #	INDUSTRY #	DESCRIPTION	AXLE TYPE	APPLICATION
4746879	C7 25I	Gear Set, Differential	Chrysler 7-1/4"	Many Chrysler, Dodge applications
4762774	C8 25I	Gear Set, Differential	Chrysler 8-1/4"	Jeep XJ + Many Chrysler, Dodge applications
4798912	C9 25I	Gear Set, Differential	Chrysler 9-1/4"	Many Chrysler, Dodge applications including 1998 Dodge Durango
8127092	J8127092	Gear Set, Differential	AMC Model 20	Jeep CJ's, 1976/86
908333	20433X	Gear Set, Differential	Dana Model 53	Jeep 6-226 Truck, FC-170, Gladiator
926544	22620X	Gear Set, Differential	Dana Model 25, 27	Jeep MB, M38, M38A1,CJ2A, CJ3A, CJ3B, CJ5, CJ6, C101, 4WD Wagons, 4WD Trucks, FC-150, Wagoneer
916361	18295X	Gear Set, Differential	Dana Model 44 19SL	Jeep CJ3B, CJ5, CJ6
83503002	707247X	Gear Set, Differential	Dana Model 35	Jeep XJ, MJ, YJ w/ Standard Differential
F8.8BI	F8.8BI	Differential Kit	Ford 8.8”31 Splines	87-98 Ford Light Duty Trucks
26019852	GM10BI28	Differential Kit	GM 8.5” Axle	74-91 GMTrucks 28 Splines
26019829	GM10BI30	Differential Kit	GM 8.5” Axle	92-99 GMTrucks w/30 Splines

© 2003 Projekt 4x4

Leaf Spring

REPLACES PART #	INDUSTRY #	# OF LEAVES	POSITION	JEEP STYLE	RATE CODE
A-612	97-162		FRONT	CJ	
A-614	97-225		REAR	CJ	
916047	97-305	9	REAR	CJ	
999529	97-298	7	FRONT	CJ	
4636975	97-448		FRONT	YJ	
5354892	97-368	6/1	FRONT	CJ	
5356423	97-471	7/2	REAR	CJ	
5363229	97-416	4	FRONT	CJ	
5363331	97-503	6	REAR	CJ	
52000051	97-533	4	REAR	XJ	LC
52000707	97-541	4	REAR	XJ	LM
52003448	97-442	4	FRONT	YJ	
52003449	97-567	6	REAR	YJ	
4886185AA	97-545	4	REAR	XJ	LS
4886186AA	97-547	4	REAR	XJ	LT
4886187AA	97-537, 97-539	4	REAR	XJ	LK, LL

Hub

REPLACES PART #	POSITION	APPLICATION
J0811351	REAR	JEEP CJ2A, CJ3A, CJ3B, CJ5, CJ6, C101, FC-150, 475 4WD, 6-226 4WD, 6-WAGONEER w/ 230, V8-327, V8-350 w/ TAPERED AXLES
J0909548	FRONT	JEEP MB, M38, M38A1, CJ2A, CJ3A, CJ3B, CJ5, CJ6 (9 X 1-3/4" BRAKES)
J0912647	REAR	JEEP 6-226 4WD TRUCK, 475 4WD TRUCK, FC-170 TRUCK w/ TAPERED AXLES
J3238527	FRONT	AMC EAGLE, SX-4, 1980 /
4504039	FRONT	CHRYSLER MINIVANS w/ 15" WHEEL, 1989/95
5252235	FRONT	JEEP XJ, YJ 1990
5359275H	FRONT	JEEP J-20 1977/
5363421H	FRONT	JEEP CJ5, CJ7 1982/86 w/ 5 BOLT OUTER FLANGE
J8133730	REAR	JEEP CJ5, CJ7 1976/86 w/ AMC MODEL 20
J8136650	FRONT, REAR	JEEP CJ3B, CJ5, CJ6, C101 (w/ 10", 11" BRAKES, /1975) (USES 2- LM501310)
J8136651	FRONT	JEEP CJ5, CJ7 1976/81 W/ 6 BOLT OUTER FLANGE (USES 1-LM501310, 1-LM102910)
53000228	FRONT	JEEP XJ 1984/89, YJ 1987/89
53007449	FRONT	JEEP XJ, YJ 1991/96

© 2003 Projekt 4x4

Transmission Kit

Small Parts Repair Kit

Kits include all snap rings, washers, needle rollers, and lock plates

REPLACES PART #	CASTING NO. ON CASE	REPLACES PART #	CASTING NO. ON CASE
T14A	T14X-1x or 13-02-065-9XX	T170-50	C2604XXX
T14A-MK*	T14X-1x or 13-02-065-9XX	T170-50MK*	C2604XXX
T15A	T15A-1X or 13-07-065-9XX	SR4-50	13-32-065-9XX / 13-40-065-9XX
T15A-MK*	T15A-1X or 13-07-065-9XX	SR4-50MK*	13-32-065-9XX / 13-40-065-9XX
T18	T18-1X or 13-01-065-9XX	T4-50	13-51-065-9XX / 13-52-065-9XX
T86AA	T86X-1X	T4-50*	13-51-065-9XX / 13-52-065-9XX
T90	T90X-1X	T5-50	13-51-065-9XX / 13-52-06509XX
T150	260XXXX	T5-50MK*	13-51-065-9XX / 13-52-06509XX
T150-MK*	260XXXX		

* Master Kits also include synchronizer springs and plates

Shift Lever Repair Kit

SLR-176K Shift lever repair kit for the T170 series transmission includes: caps, spring and boot.

Gasket and Seal Kit

REPLACES PART #		REPLACES PART #	
991198	(T14A-55A)	923301	(T90A-55)
991198	(T15A-55A)	8127215	(T150-55) - Gaskets only
923302	(T18J-55)	T170GS	
944817	(T86AA-55)	SR4-GS	
		AX-GS	

Overhaul Kit

BK-T5M	Includes: bearings, S.P. kit, seals, sealant and fork inserts
BK-T170	Includes: bearings, S.P. kit, gaskets and seals, synchronizer rings,

Bearing Kit

BK-BA10	Includes: All 6 bearings and 3 oil seals for Peugeot Transmission
AX15-BK	Includes: All 4 bearings, 2 oil seals and sealant
BK-AX5E	Includes: All 4 bearings, 2 oil seals and sealant
BK-AX5L	Includes: All 4 bearings, 2 oil seals and sealant

PLEASE NOTE: Early AX5 Transmissions had threaded end cluster gear.
Late model AX5 had C-clip type end on cluster.

© 2003 Projekt 4x4

Oil Seal

C/R #	National #	Replaces Part #
208	5111	3205331
209	5112	3206691
212	9178S	53000477
212	9178S	4179498
6229	450009	A974
7443		940556
7481	474131	4486141
8645	340413	927645
9837	350414	907653
11055	313842	4486140
11081	340151	940555
11111	3638	52067595
11123	482208	83300041
11615	223015	83500501
11615	223015	MD703735
11771	40576	A779
11899	710068	8121781
12363	7412S	8132779
12582	7686S	3170699
12733	PSK1	8134568
12733	PSK1	4186220
12741	710164	83503234
13112	473212	53000476
13165	5131	83501009 (2.625 o.d.)
13165	5131	8124832 (2.28 o.d.)
13508	8549A	4485691
13571	5872S	8122404
13671	473212	83503010
13710	42763	640959
13839	7687S	3170700
13955	9344S	942901
13956	8676S	935612
13990	8660S	4856336
14721	223830, 223832	83503752
14978	4370N	4638904
15047	4370N	83504708
15047	4370N	83501389
15141	481837	3235929
15141	481837	994258
15440	710046	8134446
15450	450185 (open)	8123077

C/R #	National #	Replaces Part #
15635	473229	8131669
15655	450185 (closed)	923896
15788	5778	639265 (closed)
15788	5778	998092 (open)
15791	5778V	83503390
15843	710202	83504375
16044	8835S	4137426
16362	50286	644254
16659	7022s	3173532
17280	9845	8132221
17284	471504	931634
17726	482267	5358980
17806	321460	3224704
18444	714675	83504946
18580	472439	8132672
18662	3946	8130808
18662	3946	8133432
18731	9912	994261
18731	9912	83503063
19244	3173	8130870
19255	63884	4167929
19500	5121	3223363
19601	1209	83503108
19799	472341	3193613
20168	5329	914802
21101	6626S	805150
21159	8430S	938151
21961	3533	3250733
22306	341022	8130982
22306	341022	8130982
22311	722109	8127350
23035	442874	5356675
23300	493637	5365082
23844	455860	5352786
24110	4019N	53000237
24886	3942	3238137
24898	471271	5359703
24904	442380	5352171
28646	470547	53000239
29256	716445	33004143

© 2003 Projekt 4x4

Axle / Differential

Axle / Differential 2-1

Model 20 Rear Axle 2-3
Model 30 Front Axle 2-7
ZJ 2-7
YJ 2-8
TJ 2-9
XJ 2-10
Model 35 Rear Axle 2-15
ZJ 2-15
XJ 2-15
YJ 2-18
TJ 2-20
Propeller Shaft 2-23

Back

© 2003 Projekt 4x4

MODEL 20

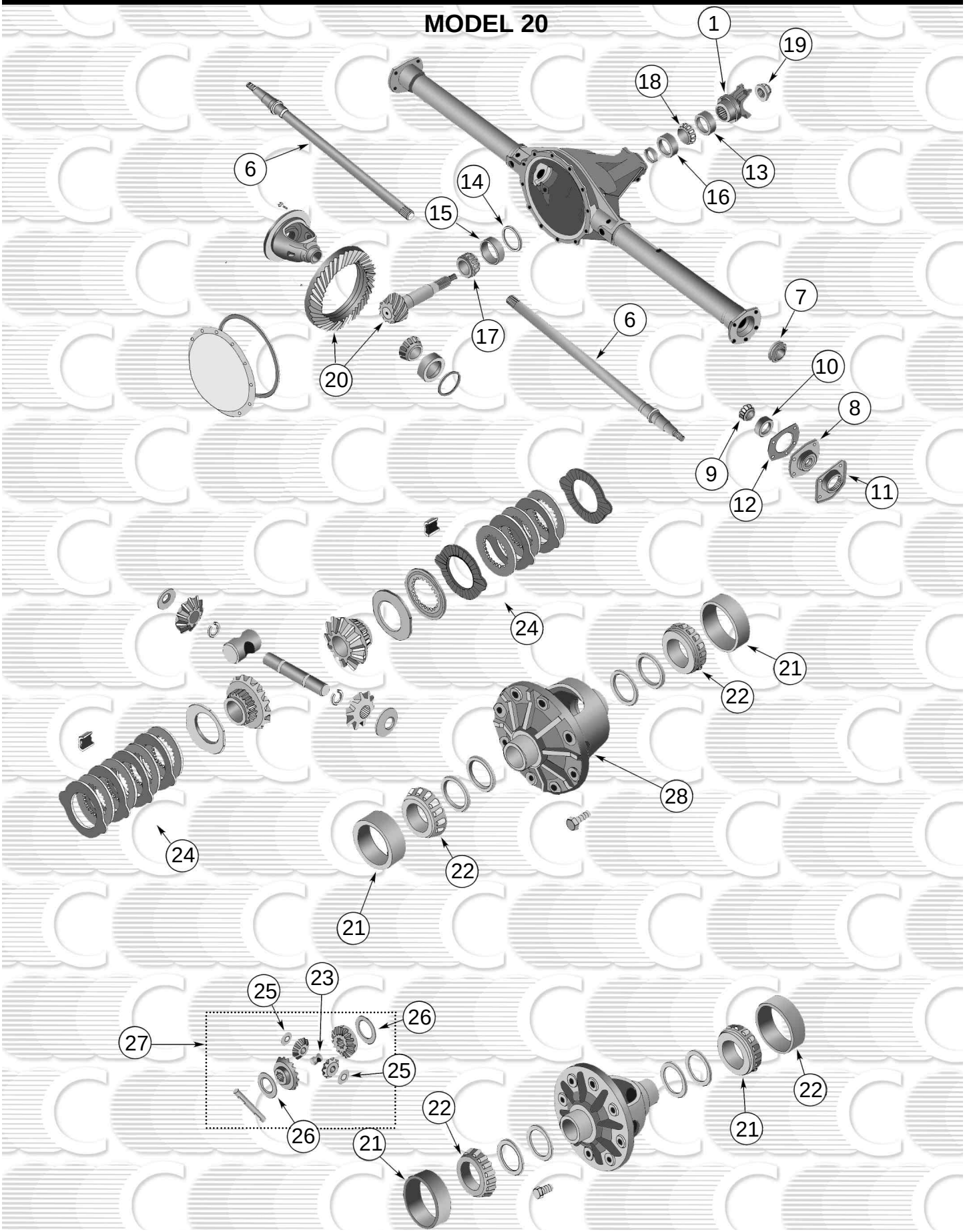

© 2003 Projekt 4x4

MODEL 20 REAR AXLE, CJ / SJ:

NO.	DESCRIPTION	REPLACES PART#:
1.	Yoke (1976-81)	8129201
	Yoke (1982-86) strap & bolt style	8132702
2.	Washer, axle shaft	131018 (NP)
3.	Nut, axle shaft	3155675 (NP)
4.	Key, axle shaft	G103905 (NP)
5.	Stud, axle shaft/hub (CJ)	5355719 (NP)
	Stud, axle shaft/hub (SJ)	8124584 (NP)
6.	Shaft, axle Rt. (1976-79) CJ WQT (Lng. 22”)	8127081
	Shaft, axle Lt. (1976-79) CJ LQT (Lng. 33”)	8127079
	Shaft, axle Rt. (1976-81) CJ LQT (Lng. 29”)	8127071
	Shaft, axle Lt. (1976-81) CJ LQT(Lng. 26”)	8127070
	Shaft, axle Rt. (1982-86) CJ (Lng. 31”)	8133886
	Shaft, axle Lt. (1982-86) CJ (Lng. 28”)	8133885
6A.	Kit, axle shaft (NP) (Each kit includes the shaft, hub, seals, bearings, cups, nut, washer and axle key and is designated with a “K” suffix)	
6B.	Kit, hub (1976-86) CJ (Kit includes hub, seals, bearings, cups, nut, washer and axle key)	8133730K (NP)
7.	Seal, axle shaft inner (CJ)	3170700
	Seal, axle shaft inner (SJ)	3235929
8.	Seal, axle shaft outer (CJ)	4485691
	Seal, axle shaft outer (SJ)	8124955
9.	Bearing, axle shaft (CJ)	3150046
	Bearing, axle shaft (SJ)	8124050
10.	Bearing cup, axle shaft (CJ)	3150045
11.	Retainer	3184573
12.	Shim (.003”)	3141319
	Shim (.010”)	3141320
13.	Seal, pinion	3208474
14.	Shim kit, pinion adjusting	3205533K
15.	Bearing cup, pinion inner	3172564
16.	Bearing cup, pinion outer	3172134
17.	Bearing, inner pinion	317256
18.	Bearing, outer pinion	3172135
19.	Nut, pinion	3182601
20.	Gear & pinion set 2.73	8132699
	Gear & pinion set 3.31	8132700
	Gear & pinion set 3.54	4486825
	Gear & pinion set 4.10	8127072
21.	Bearing cup, differential	3172566
22.	Side bearing, differential	3172565
23.	Thrust block, Std. differential	3162323

© 2003 Projekt 4x4

AMC MODEL 20 REAR AXLE, CJ / SJ:

24.	Disc kit, Trac-Lok (CJ)	8120325
25.	Washer, differential pinion gear	3222799
26.	Washer, differential side gear	3220250
27.	Gear set, differential (Std.)	8127092
	Gear set, Trac-Lok differential	8120326
28.	Case, Trac-Lok differential (case only) (CJ)	8120280
29.	Case assembly, Trac-Lok differential(CJ)	8120235

© 2003 Projekt 4x4

Axle / Differential

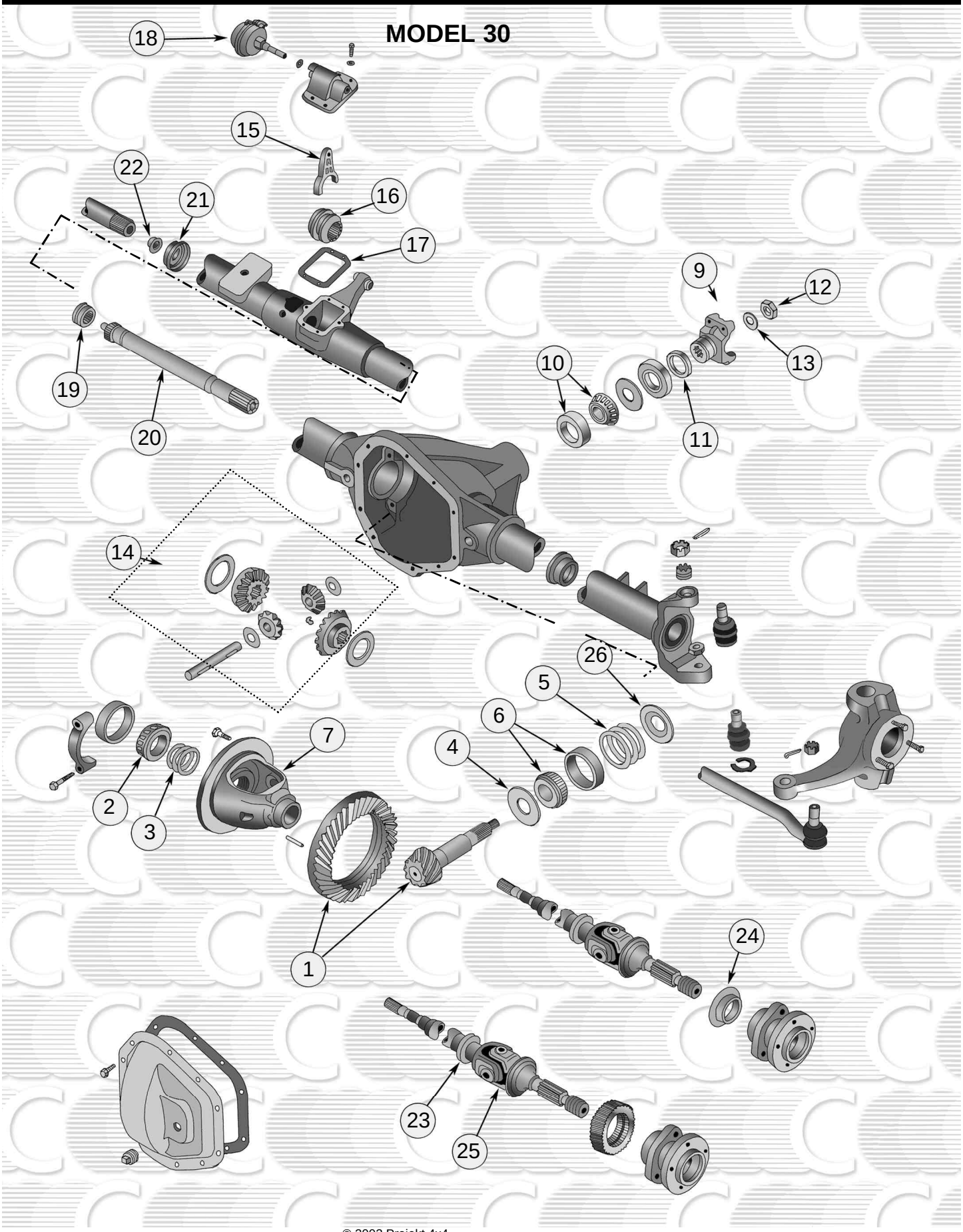

© 2003 Projekt 4x4

MODEL 30 FRONT AXLE

ZJ 1993 - 98:

Disconnect option is not available

NO.	DESCRIPTION	REPLACES PART#
1.	Ring & pinion set (1993-1/4/96) 3.55	4720864
	Ring & pinion set (1/4/96-98) 3.55	4864906
	Ring & pinion set (1993-1/4/96) 3.73	4741015
	Ring & pinion set (1/4/96-98) 3.73	4864843
2.	Side bearing package	8126500
3.	Shim package	4720863
4.	Oil slinger	3893982
5.	Shim package	4720862
6.	Bearing package	8126499
7.	Differential case assy.3.07-3.55	5252582
	Differential case assy. 3.73-4.10	5252590
8.	Slinger	636566
9.	Yoke w/ U-joint prop	83503388
	Yoke w/ CV prop	4778812
10.	Outer pinion bearing package	5252508
11.	Pinion seal (1993-96)	83503390
	Pinion seal (1997-98)	4746772
12.	Pinion nut	801367
13.	Pinion washer	636570
14.	Differential gear set	5252591
21.	Seal (1993-96)	8121781
	Seal (1997-98)	4874477
23.	Slinger, inner shaft	83507105
24.	Slinger, outer shaft	83500201
25.	Axle shaft (1993-98) Rt. w/ CV	4720380
	Axle shaft (1993-98) Lt. w/ CV	4720381
	Axle shaft (1993-96) Rt. w/ cardan joint	4740970
	Axle shaft (1993-96) Lt. w/ cardan joint	4740971
	Axle shaft (1997-98) Rt. w/ cardan joint	4874306
	Axle shaft (1997-98) Lt. w/ cardan joint	4874307
25A.	Outer axle shaft	4713190 (NP)
25B.	U-joint, axle shaft	4137757 (NP)
25C.	Outer CV boot package	4796233 (NP)

© 2003 Projekt 4x4

MODEL 30 FRONT AXLE (cont.)

YJ 1987 - 1990:

NO.	DESCRIPTION	REPLACES PART#
1.	Ring & pinion set 3.07	83500187
	Ring & pinion set 3.54	83502355
	Ring & pinion set 3.55	83505480
	Ring & pinion set 4.10	83502353
2.	Side bearing package	8126500
3.	Shim package	83500191
4.	Oil slinger	916372
5.	Shim package	83500192
6.	Bearing package	8126499
7.	Differential case assy. 3.07, 3.54, 3.55	83500168
	Differential case assy. 4.10	83500169
8.	Slinger	636566
9.	Yoke (w/o slinger)	8133241
	Yoke (w/ slinger)	83503388
10.	Outer pinion bearing package	8124052
11.	Pinion seal (w/o slinger)	998092
	Pinion seal (w/ slinger)	83503390
12.	Pinion nut	801367
13.	Pinion washer	636570
14.	Differential gear set	83500190
15.	Shift fork, axle	83503695
16.	Shift collar, axle shaft	83504813
17.	Cover gasket	8133709
18.	Vacuum motor, axle	83503113
19.	Bearing	8133622
20.	Intermediate shaft, axle	83500198
21.	Seal (2.29” O.D.)	83500199
	Seal (2.12” O.D.)	83503504
22.	Bearing	4137737
23.	Slinger, inner shaft	8126232
24.	Slinger, outer shaft	83500201
25.	Axle shaft (Rt.)	53000224
	Axle shaft (Lt.)	53000684

YJ 1991- 95:

NO.	DESCRIPTION	REPLACES PART#
1.	Ring & pinion set 3.07	83500187
	Ring & pinion set 3.55	83505480
	Ring & pinion set (1994-95) 3.73	4746074
	Ring & pinion set 4.10	83502353
2.	Side bearing package	8126500
3.	Shim package	83500191

© 2003 Projekt 4x4

MODEL 30 FRONT AXLE (cont.)

4.	Oil slinger	3893982
5.	Shim package	83500192
6.	Bearing package	8126499
7.	Differential case assy. 3.07, 3.55	5252582
	Differential case assy. 3.73, 4.10	5252590
8.	Slinger	636566
9.	Yoke (1991-93) w/ slinger	8133241
	Yoke (1991-95) w/o slinger	83503388
10.	Outer pinion bearing package	8124052
11.	Pinion seal (1991-93) w/ slinger	998092
	Pinion seal (1991-95) w/o slinger	83503390
12.	Pinion nut	801367
13.	Pinion washer	636570
14.	Differential gear set	5252591
15.	Shift fork, axle	5252599
16.	Shift collar, axle shaft	83504813
17.	Cover gasket	4137732
18.	Vacuum motor, axle	4506116
19.	Bearing/Bushing	5252686
20.	Intermediate shaft, axle	5252594
21.	Seal	83503504
22.	Bearing/Bushing	5252687
23.	Slinger, inner shaft	83507105
25.	Axle shaft (Rt.) w/o ABS	5252145
	Axle shaft (Lt.) w/o ABS	5252585
	Axle shaft (Rt.) w/ ABS	4741033
	Axle shaft (Lt.) w/ ABS	4713189
25A.	Outer axle shaft (w/o ABS)	83500184(NP)
	Outer axle shaft (w/ ABS)	4713190 (NP)
25B.	U-joint, axle shaft (w/o ABS)	8126637 (NP)
	U-joint, axle shaft (w/ ABS)	4137757 (NP)

TJ 1997- 99:

Disconnect option is not available

NO.	DESCRIPTION	REPLACES PART#
1.	Ring & pinion set 3.55	4864906
	Ring & pinion set 3.73	4864843
	Ring & pinion set 4.10	4864913
2.	Bearing package	8126500
3.	Shim package	4720863
5.	Shim package 3.07, 3.55	83500192
	Shim package 3.73, 4.10	4720862
6.	Bearing package	8126499

MODEL 30 FRONT AXLE (cont.)

© 2003 Projekt 4x4

7.	Differential case assy. 3.07, 3.55	5252582
	Differential case assy. 3.73, 4.10	5252590
8.	Slinger	4031974
9.	Yoke	83503388
10.	Outer pinion bearing package	5252508
11.	Pinion seal	4746772
12.	Pinion nut	1791575
13.	Pinion washer	1791576
14.	Differential gear set	5252591
21.	Seal	4874477
23.	Slinger, inner shaft	4797769
24.	Slinger, outer shaft	83500201
25.	Axle shaft (Rt.) w/o ABS	4874302
	Axle shaft (Lt.) w/o ABS	4874303
	Axle shaft (Rt.) w/ ABS	4874306
	Axle shaft (Lt.) w/ ABS	4874307
25A.	Outer axle shaft w/o ABS	83500184 (NP)
	Outer axle shaft w/ ABS	4728984 (NP)
25B.	U-joint, axle shaft	4137757 (NP)

XJ 1984 - 90:

With Disconnect

NO.	DESCRIPTION	REPLACES PART#
1.	Ring & pinion set 3.07	83500187
	Ring & pinion set (1984-86) 3.31	83500188
	Ring & pinion set 3.54	83502355
	Ring & pinion set (1984-86) 3.55	83504206
	Ring & pinion set (1987-90) 3.55	83505480
	Ring & pinion set (1987-90) 4.10	83502353
	Ring & pinion set 4.56	83503424
2.	Side bearing package	8126500
3.	Shim package	83500191
4.	Oil slinger	916372
5.	Shim package	83500192
6.	Bearing package	8126499
7.	Differential case assy. (1984-89) 3.07-3.55	83500168
	Differential case assy. (1990)3.07-3.55,	5252582
	Differential case assy. (1984-89) 3.73-4.56	83500169
	Differential case assy. (1990) 3.73-4.56	5252590
8.	Slinger	636566
9.	Yoke (1984-86) w/o slinger	8133241
	Yoke (1984-90) w/ slinger	83503388
10.	Outer pinion bearing package	8124052
11.	Pinion seal (1984-86) w/o slinger	998092
	Pinion seal (1984-90) w/ slinger	83503390

© 2003 Projekt 4x4

MODEL 30 FRONT AXLE (cont.)

12.	Pinion nut	801367
13.	Pinion washer	636570
14.	Differential gear set (1984-89)	83500190
	Differential gear set (1990)	5252591
15.	Shift fork, axle (1984-86)	83500197
	Shift fork, axle (1987-90)	83503695
16.	Shift collar, axle shaft (1984-86)	8134214
	Shift collar, axle shaft(1987-90)	83504813
17.	Cover gasket	8133709
18.	Vacuum motor, axle	83503113
19.	Bearing/Bushing (1984-89)	8133622
	Bearing/Bushing (1990)	5252687
20.	Intermediate shaft, axle (1984-89)	83500198
	Intermediate shaft, axle (1990)	5252594
21.	Seal (2.29” O.D.)	83500199
	Seal (2.12” O.D.)	83503504
22.	Bearing/Bushing	8134213
23.	Slinger, inner shaft (1984-89)	8126232
	Slinger, inner shaft (1990)	83507105
24.	Slinger, outer shaft (1984-89)	83500201
25.	Axle shaft (1984-86) Rt. w/ CV	53000686 (Not Stocked)
	Axle shaft (1984-86) Lt. w/ CV	53000227
	Axle shaft (1984-89) Rt. w/ cardan joint	53000224
	Axle shaft (1984-89) Lt. w/ cardan joint	53000684
	Axle shaft (1990) Rt. w/ cardan joint	5252972
	Axle shaft (1990) Lt. w/ cardan joint	5252584
25A.	Outer axle shaft (1984-86) w/ CV	83500198 (NP)
	Outer axle shaft (1984-90) w/ cardan	83500184 (NP)
25B.	U-joint, axle shaft	8126637 (NP)

XJ 1991- 93:

NO.	DESCRIPTION	REPLACES PART#
1.	Ring & pinion set 3.07	83500187
	Ring & pinion set 3.55	83505480
	Ring & pinion set 4.10	83502353
	Ring & pinion set 4.56	83503424
2.	Side bearing package	8126500
3.	Shim package	83500191
4.	Oil slinger	3893982
5.	Shim package	83500192
6.	Bearing package	8126499
7.	Differential case assy. 3.07, 3.55	5252582
	Differential case assy. 3.73, 4.56	5252590
8.	Slinger	636566
9.	Yoke	83503388

© 2003 Projekt 4x4

MODEL 30 FRONT AXLE (cont.)

10.	Outer pinion bearing package	8124052
11.	Pinion seal	83503390
12.	Pinion nut	801367
13.	Pinion washer	636570
14.	Differential gear set	5252591
15.	Shift fork, axle	5252599
16.	Shift collar, axle shaft	83504813
17.	Cover gasket	4137732
18.	Vacuum motor, axle	4506116
19.	Bearing/Bushing	5252686
20.	Intermediate shaft, axle	5252594
21.	Seal (2.29” O.D.)	83500199
	Seal (2.12” O.D.)	83503504
22.	Bearing/Bushing	5252687
23.	Slinger, inner shaft	83507105
24.	Slinger, outer shaft	83500201
25.	Axle shaft (Rt.)	5252145
	Axle shaft (Lt.)	5252585
25A.	Outer axle shaft	83500184 (NP)
25B.	U-joint, axle shaft	8126637 (NP)

XJ 1994 - 99:

Disconnect option is not available on 1994-99 models

NO.	DESCRIPTION	REPLACES PART#
1.	Ring & pinion set (1994-97) 3.07	83500187
	Ring & pinion set (1994-96) 3.55	83505480
	Ring & pinion set (1998-99)	83505480
	Ring & pinion set (1997) 3.55	4864906
	Ring & pinion set (1997) 3.73	4746074
	Ring & pinion set (1994-96) 3.73	4741015
	Ring & pinion set (1994-96) 3.73 w/ RHD	4746074
	Ring & pinion set (1994-97) 4.10	83502353
2.	Side bearing package	8126500
3.	Shim package	83500191
4.	Oil slinger	3893982
5.	Shim package	835001923
6.	Bearing package (1994-97)	8126499
	Bearing package (1998-99)	2800484
7.	Differential case assy. 3.07, 3.55	5252582
	Differential case assy. 3.73, 4.10, 4.56	5252590
8.	Slinger (1994-97)	636566
9.	Yoke (1994-96)	83503388
	Yoke (1997-98)	4746835
	Yoke (1999)	52068839

© 2003 Projekt 4x4

MODEL 30 FRONT AXLE (cont.)

10.	Outer pinion bearing package (1994-97)	8124052
	Outer pinion bearing package (1998-99)	2070316
11.	Pinion seal (1994-96)	83503390
	Pinion seal (1997)	8121781
	Pinion seal (1998-99)	4746772
12.	Pinion nut	801367
13.	Pinion washer	636570
14.	Differential gear set	5252591
21.	Seal (1994-96)	8121781
	Seal (1997-99)	4874477
23.	Slinger, inner shaft (1994-96)	83507105
24.	Slinger, outer shaft	83500201
25.	Axle shaft (1994-96) Rt. w/o ABS	5252584
	Axle shaft (1994-96) Lt. w/o ABS	5252585
	Axle shaft (1994-96) Rt. w/ ABS	4713188
	Axle shaft (1994-96) Lt. w/ ABS	4713189
	Axle shaft (1997-99) Rt. w/o ABS	4874302
	Axle shaft (1997-99) Lt. w/o ABS	4874303
	Axle shaft (1997-99) Rt. w/ ABS	4874306
	Axle shaft (1997-99) Lt. w/ ABS	4874307
25A.	Outer axle shaft (1994-96) w/o ABS	4636059 (NP)
	Outer axle shaft (1994-96) w/ ABS	4713190 (NP)
	Outer axle shaft (1997-99) w/o ABS	83500184 (NP)
	Outer axle shaft (1997-99) w/ ABS	4728984 (NP)
25B.	U-joint, axle shaft (1994-99) 1.06”cap dia.	8126637 (NP)
	U-joint, axle shaft (1994-96) 1.187” cap dia.	4137757 (NP)

© 2003 Projekt 4x4

Axle / Differential

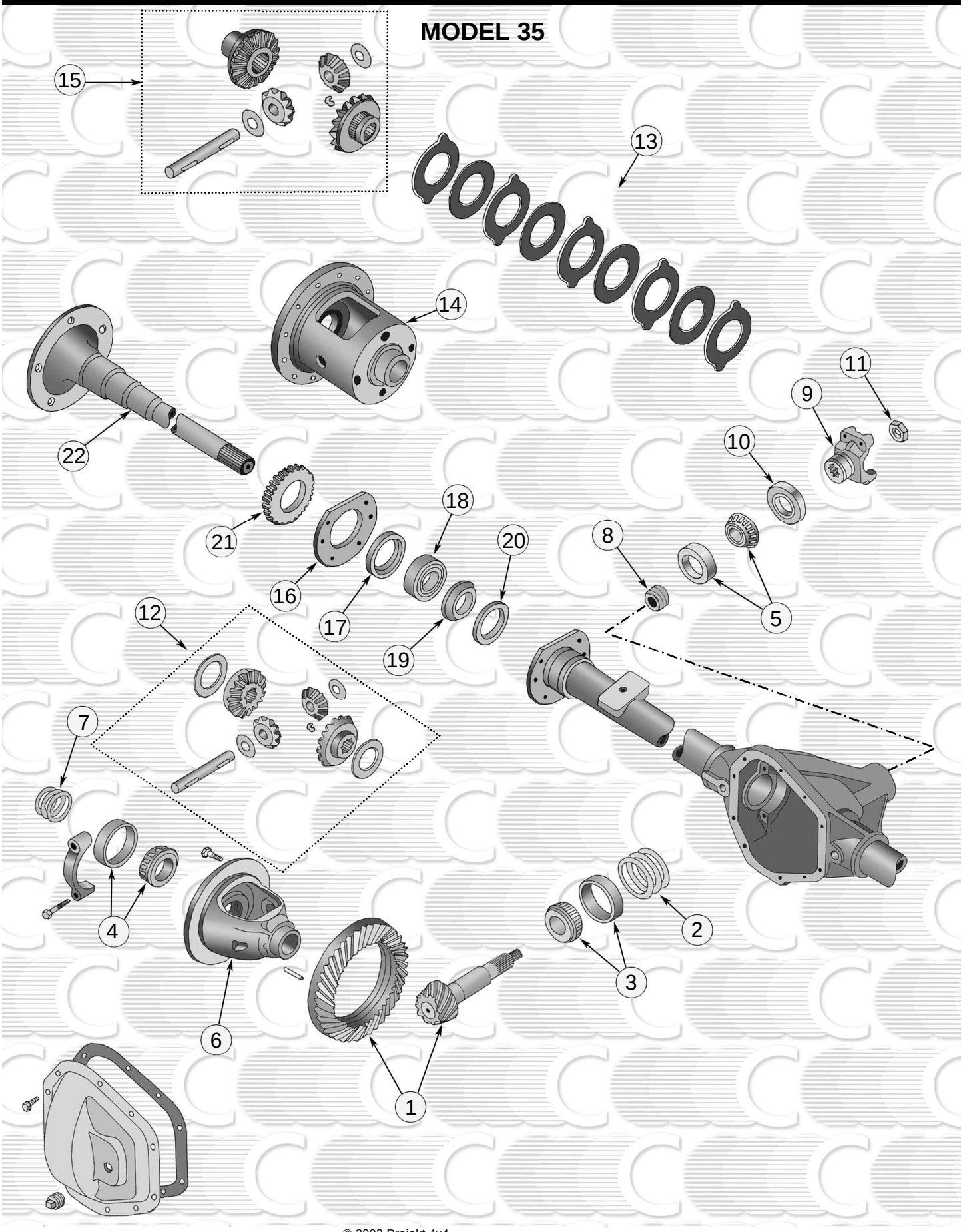

© 2003 Projekt 4x4

MODEL 35 REAR AXLE

ZJ 1993 - 98:

(*)=Locking differential

NO.	DESCRIPTION	REPLACES PART#
1.	Ring & pinion set (1993-96) 3.07	83505472
	Ring & pinion set (1993-99) 3.55	4761676
	Ring & pinion set (1993-99) 3.73	4761678
	Ring & pinion set (1993-96) 4.11	83504938
1A.	Bolt set, ring & pinion	83504374
2.	Pinion shim package	4720922
3.	Pinion bearing package	5252507
4.	Side bearing package	8126500
5.	Outer pinion bearing package	5252508
6.	Differential case assy. 3.55, 3.73	4740834
7.	Shim package	83503004
9.	Pinion Yoke	4797552
10.	Pinion seal	83504946
11.	Pinion nut (1993-96)	3182601
	Pinion nut (1997-98)	4720895
12.	Differential gear set (1993-94) 3.07	4637393
	Differential gear set (1994-99)	4740670
13.	* Disc package (included with gear set #15)	5252506
14.	* Differential case assy.	5252496
15.	* Differential gear set	4773010
18.	Bearing, axle	8134586
19.	Retainer clip, axle	5252505 (NP)
20.	Axle seal, inner (1993-96)	5252499
	Axle seal, inner (1997-98)	4856336
22.	Shaft, axle (1993-96) Rt. w/ drum brake	4713192
	Shaft, axle (1993-96) Lt. w/ drum brake	4713193
	Shaft, axle (1993-99) Rt. w/ disc brake	4762194
	Shaft, axle (1993-96) Lt. w/ disc brake	4762195
22A.	Wheel bolt	83503053 (NP)

XJ 1984 - 90:

(*)=Locking differential

NO.	DESCRIPTION	REPLACES PART#
1.	Ring & pinion set (1984-86) 3.31	4487814
	Ring & pinion set (1984-86) 3.54	8130782
	Ring & pinion set (1984-86) 3.55	83503197
	Ring & pinion set (1984-86) 3.73	83500257
	Ring & pinion set (1984-86) 4.11	83502486
	Ring & pinion set (1984-86) 4.56	83503432
	Ring & pinion set (1987-90) 3.07 (40-13)	83504934
	Ring & pinion set (1987-90) 3.07 (43-14)	83505472

© 2003 Projekt 4x4

MODEL 35 REAR AXLE

XJ 1984 - 90: (Continued from previous page)

(*)=Locking differential

1.	Ring & pinion set (1987-90) 3.55	83504376
	Ring & pinion set (1987-90) 4.11	83504938
1.	Ring & pinion set (1987-90) 4.56	83504377
2.	Pinion shim package	83503003
3.	Pinion bearing package	5252507
4.	Side bearing package	8126500
5.	Outer pinion bearing package	5252508
6.	Differential case assy. (1984-86)	53000561
	Differential case assy. (1987-90) 3.07, 3.31	83502880
	Differential case assy. (1987-90) 3.55, 4.11, 4.56	83503001
7.	Shim package	83503004
8.	Pinion Spacer	3175779
9.	Pinion Yoke	83503318
10.	Pinion seal (1984-86)	53002642
	Pinion seal (1987-90)	83504946
11.	Pinion nut	3182601
12.	Differential gear set (1984-86)	83500138
	Differential gear set (1987-89)	83503002
	Differential gear set (1990)	5252495
13.	* Disc package (1984-89) (Included with gear set)	83500263
	* Disc package (1990) (included with gear set)	5252506
14.	* Differential case assy. (1984-86)	53000986
	* Differential case assy. (1987-89) 3.07	83505020
	* Differential case assy. (1987-89) 3.55, 4.11	83505021
	* Differential case assy. (1990) 3.07	5252512
	* Differential case assy. (1990) 3.55, 4.11	5252496
15.	* Differential gear set (1984-87)	83500262
	* Differential gear set (1988-89)	83505022
	* Differential gear set (1990)	5252497
16.	Axle seal retainer	83503022
17.	Axle seal, outer	53000477
18.	Bearing, axle (1984-86)	53000475
	Bearing, axle (1987-90)	8134586
19.	Retainer ring, axle	83503054
20.	Axle seal, inner (1984-86)	53000476
	Axle seal, inner (1987-89)	83503010
	Axle seal, inner (1990)	5252499
22.	Shaft, axle (Rt.)	83502882
	Shaft, axle (Lt.)	83502883
22A.	Wheel bolt	83503053 (NP)

© 2003 Projekt 4x4

XJ 1991-99

(*)=Locking differential

NO.	DESCRIPTION	REPLACES PART#
1.	Ring & pinion set 3.07	83505472
	Ring & pinion set (1991-93) 3.55	83504376
	Ring & pinion set (1994-99) 3.55	4761676
	Ring & pinion set (1994-96) 3.73	4740873
	Ring & pinion set (1997-99) 3.73	4761678
	Ring & pinion set 4.11	83504938
1A.	Bolt set, ring & pinion	83504374 (NP)
2.	Pinion shim package (1991-93)	83503003
	Pinion shim package (1994-99)	4720922
3.	Pinion bearing package	5252507
4.	Side bearing package	8126500
5.	Outer pinion bearing package	5252508
6.	Differential case assy. 3.07 (1991-96) w/ casting# 42148	5252510
	Differential case assy. 3.07 (1994-99) w/ casting# 44650	4740833
	Differential case assy. (1991-93) 3.55, 4.11 w/2.5L	5252494
	Differential case assy. (1991-93) 3.55, 4.11 w/4.0L	5252517
	Differential case assy. (1994-96) 3.55, 3.73, 4.11 w/ casting# 41994, 43225, 4013	5252517
	Differential case assy. (1994-99) 3.55, 3.73, 4.11 w/ casting# 44591, 44648, 4292	4740834
7.	Shim package	83503004
9.	Pinion yoke (1991-97) 1310	83503318
	Pinion yoke (1994-2/15/95) 7290	4761060
	Pinion yoke (2/15/95-99) 1310	4797552
10.	Pinion seal	83504946
11.	Pinion nut (1991-96)	3182601
	Pinion nut (1997-99)	4720895
12.	Differential gear set (1991-93)	4637393
	Differential gear set (1994) 3.07 w/o ABS	4637393
	Differential gear set (1994-99)	4740670
13.	* Disc package (included with gear set)	5252506
14.	* Differential case assy.(1991-99) 3.07 (included with gear set)	5252512
	* Differential case assy. (1991-99) 3.55, 3.73, 4.11	5252496
15	* Differential gear set (1991-93)	5252497
	* Differential gear set (1994-99)	4773010
18.	Bearing, axle	8134586
19.	Retainer clip, axle	5252505 (NP)
20.	Axle seal, inner	5252499
	Axle seal, inner	4856336
22.	Shaft, axle (1991) Rt.	5252948
	Shaft, axle (1991) Lt.	5252949
	Shaft, axle (1992-99) Rt.	4713192
	Shaft, axle (1992-99) Lt.	4713193
22A.	Wheel bolt	83503053

© 2003 Projekt 4x4

MODEL 35 REAR AXLE

YJ 1987 - 90:

(*)=Locking differential

NO.	DESCRIPTION	REPLACES PART#
1.	Ring & pinion set 3.55	83504376
	Ring & pinion set 4.11	83504938
1A.	Bolt set, ring & pinion	83504374 (NP)
2.	Pinion shim package	83503003
3.	Pinion bearing package	5252507
4.	Side bearing package	8126500
5.	Outer pinion bearing package	5252508
6.	Differential case assy. (1987-89) 3.07 .66” bolt lng.	53000561
	Differential case assy. (1987-89) 3.07 .81” bolt lng.	83502880
	Differential case assy. (1987-89) 3.55, 4.11	53000561
	Differential case assy. (1990) 3.07	5252510
	Differential case assy. (1990) 3.55, 4.11, 4.56	5252494
7.	Shim package	83503004
8.	Pinion Spacer	3175779
9.	Pinion Yoke	83503318
10.	Pinion seal	83504946
11.	Pinion nut	3182601
12.	Differential gear set (1987-89)	83503002
	Differential gear set (1990)	5252495
13.	* Disc package (1987-89) (included with gear set)	83500263
	* Disc package (1990) (included with gear set)	5252506
14.	* Differential case assy. (1987)	53000986
	* Differential case assy. (1988-89)	83505021
	* Differential case assy. (1990)	5252496
15.	* Differential gear set (1987)	83500262
	* Differential gear set (1988-89)	83505022
	* Differential gear set (1990)	5252497
16.	Axle seal retainer	83503022
17.	Axle seal, outer	53000477
18.	Bearing, axle (1987-89)	53000475
	Bearing, axle (1990)	8134586
19.	Retainer ring, axle	83503054
20.	Axle seal, inner (1987-89)	83503010
	Axle seal, inner (1990)	5252499
22.	Shaft, axle (Rt.)	83502882
	Shaft, axle (Lt.)	83502883
22A.	Wheel bolt	83503053 (NP)

© 2003 Projekt 4x4

YJ 1991- 95:

(*)=Locking differential

NO.	DESCRIPTION	REPLACES PART#
1.	Ring & pinion set 3.07	83505472
	Ring & pinion set (1991-93) 3.55	83504376
	Ring & pinion set (1994-95) 3.55	4761676
	Ring & pinion set (1994-95) 3.73	4761678
	Ring & pinion set 4.11	83504938
1A.	Bolt set, ring & pinion	83504374 (NP)
2.	Pinion shim package	4720922
3.	Pinion bearing package	5252507
4.	Side bearing package	8126500
5.	Outer pinion bearing package	5252508
6.	Differential case assy. 3.07 w/o ABS	5252510
	Differential case assy. 3.07 w/ ABS	4740833
	Differential case assy. (1991-93) 3.55, 4.11 w/ 2.5L	5252494
	Differential case assy. (1991-93) 3.55, 4.11 w/ 4.0L w/o ABS	5252517
	Differential case assy. (1994-95) 3.55, 3.73, 4.11	5252517
	Differential case assy. (1991-93) 3.55, 4.11w/ 4.0L w/ ABS	4740834
	Differential case assy. (1994-95) 3.55, 3.73, 4.11	4740834
7.	Shim package	83503004
9.	Pinion yoke (3.469” O.D.)	83503318
	Pinion yoke (3.875” O.D.)	4746835
10.	Pinion seal	83504946
11.	Pinion nut (1991-93)	3182601
	Pinion nut (1994-95)	4720895
12.	Differential gear set (1991-93) w/o ABS	4637393
	Differential gear set (1991-93) w/ ABS	4740670
	Differential gear set (1994-95) 3.07 w/o ABS	4637393
	Differential gear set (1994-95) 3.07-4.11 w/ ABS	4740670
13.	* Disc package (included with gear set)	5252506
14.	* Differential case assy.	5252496
15 *	Differential gear set (1991-93)	5252497
	Differential gear set (1994-95)	4773010
18.	Bearing, axle	8134586
19.	Retainer clip, axle	5252505 (NP)
20.	Axle seal, inner	5252499
22.	Shaft, axle (1991-92) Rt.	5252948
	Shaft, axle (1991-92) Lt.	5252949
	Shaft, axle (1993-95) Rt.	4713192
	Shaft, axle (1993-95) Lt.	4713193
22A.	Wheel bolt	83503053

© 2003 Projekt 4x4

MODEL 35 REAR AXLE

TJ 1997-99:

(*)=Locking differential

NO.	DESCRIPTION	REPLACES PART#
1.	Ring & Pinion set 3.07	83505472
	Ring & pinion set 3.55	4761676
	Ring & pinion set 3.73	4761678
	Ring & pinion set 4.11	83504938
1A.	Ring & pinion bolt set	83504374 (NP)
2.	Pinion shim package	4720922
3.	Pinion bearing package	5252507
4.	Side bearing package	8126500
5.	Outer pinion bearing package	5252508
6.	Differential case assy. 3.07	4740833
	Differential case assy. 3.55, 3.73, 4.11	4740834
7.	Shim package	83503004
8.	Pinion spacer	3175779
10.	Pinion seal	83504946
11.	Pinion nut	4720895
12.	Differential gear set	4740670
13.	* Disc package	5252506
14.	* Differential case assy. 3.07	5252512
	Differential case assy. 3.55, 3.73, 4.11	5252496
15.	* Differential gear set	4773010
18.	Bearing, axle	8134586
19.	Retainer clip, axle	5252505 (NP)
20.	Axle seal, inner	4856336
22.	Shaft, axle (Rt.)	4713192
	Shaft, axle (Lt.)	4713193

© 2003 Projekt 4x4

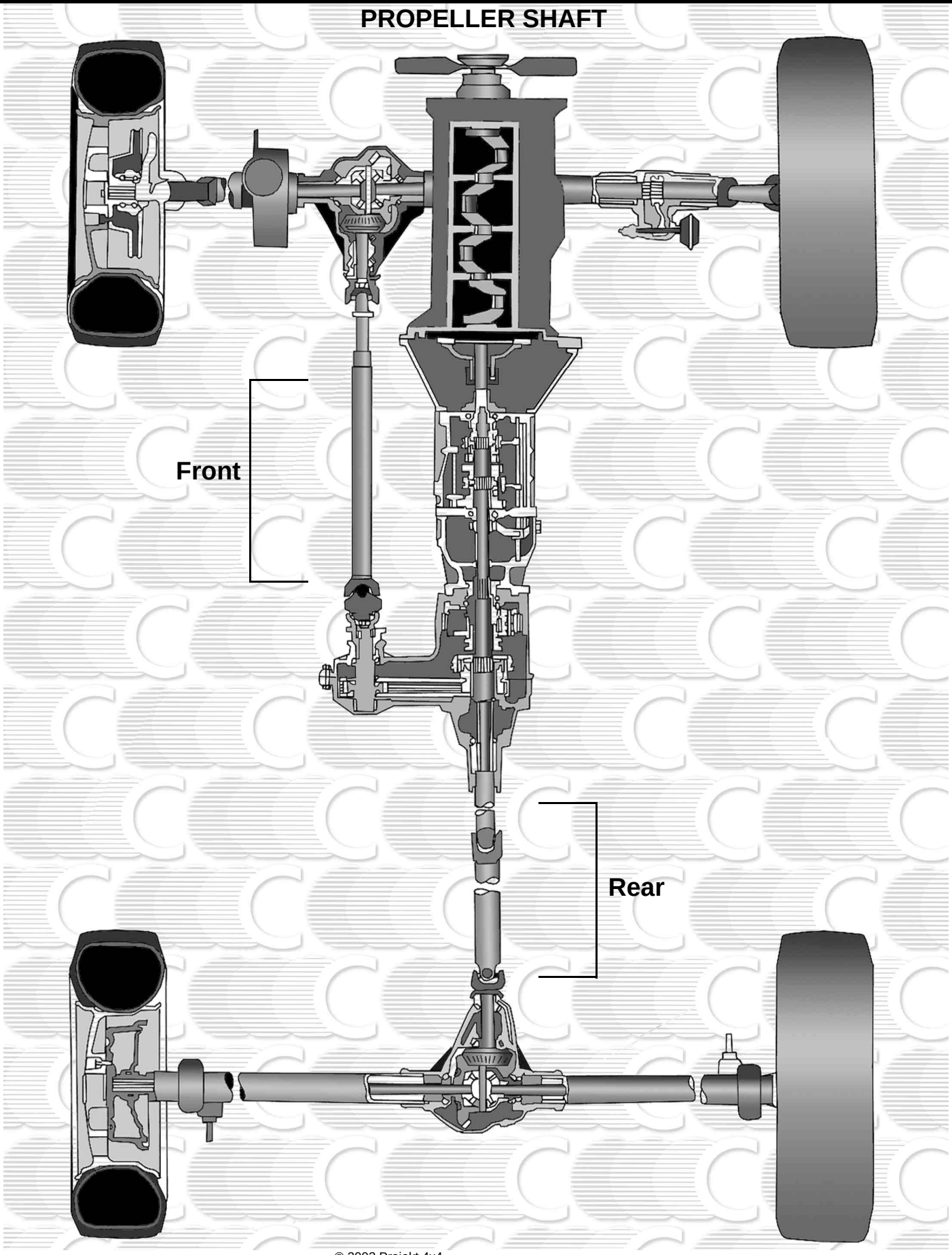

© 2003 Projekt 4x4

PROPELLER SHAFT

ZJ: FRONT

REPL. PART#	YEARS	ENGINE	TRANS	DESCRIPTION
52098344	7/17/92-96	4.0L	Man.	
52098341	7/17/92-93	4.0L	Auto.	
53008427	1993-95	5.2L	A518, 46RH	w/o CV
52087805	1994-95		A500	w/o CV
52098790	1994-1/11/95	4.0L	A500	w/o CV

ZJ: REAR

REPL. PART#	YEARS	ENGINE	TRANS	DESCRIPTION
52098163	1993	4.0L	AX/15	w/ 4WD

XJ: FRONT

REPL. PART#	YEARS	ENGINE	TRANS	DESCRIPTION
53000029	1984-86			Standard Duty
53003912	1987-88	2.5L	Auto.	
53005542	1989-00	4.0L	Auto.	
53005543	1989-00	4.0L	Man.	
53005544	1989-92	4.0L	Man.	Export
53005545	1989-92	4.0L	Auto.	Export
53005260	1987-88	4.0L	Auto.	Export
53003235	1987-88	Dsl		Export
52098208	1995-00	2.5L Dsl		Export

XJ: REAR

REPL. PART#	YEARS	ENGINE	TRANS	DESCRIPTION
53000035	1984-85		Man.	w/ NPG 228/229
83503575	1986			w/ NPG 228/229
53003241	1987-92	2.5L or Dsl	Man.	w/ 4WD & D35
53003242	1987-92	4.0L	Man.	w/ 4WD & D35
53003246	1987-92	4.0L	Auto.	W/ 4WD & D35

YJ / TJ: FRONT

REPL. PART#	YEARS	ENGINE	TRANS	DESCRIPTION
53004369	1987-90	2.5L	Man.	
53002001	1989	4.2L	Man.	
52098377	1997-99	4.0L	Man.	TJ
52098378	1997-99	4.0L	Auto	TJ

YJ / TJ: REAR

REPL. PART#	YEARS	ENGINE	TRANS	DESCRIPTION
52098218	1993-95	4.0L	AX/15	

© 2003 Projekt 4x4

PROPELLER SHAFT

SJ: FRONT

REPL. PART#	YEARS	ENGINE	TRANS	DESCRIPTION
5360995	1981-90		4 spd	
5360996	1981-90	5.9L	Auto.	
5360997	1981-90	4.2L	Auto.	
5360998	1981-90		4 spd	J-20
5363399	1981-86		5 spd	J-10

SJ: REAR

REPL. PART#	YEARS	ENGINE	TRANS	DESCRIPTION
5361001	1981-90	4.2L	Auto.	J-10 (54.20" Long)
5360999	1981-90	4.2L	Auto.	GW (32.20" Long)
5361003	1981-90	5.9L	Auto.	GW (36.14" Long)
5361007	1981-90	4.2L	4 spd	GW w/NPG208 (40.40" Long)
5361011	1981-90	4.2L	Auto.	GW w/NPG208 (37.32" Long)
5361015	1981-90	5.9L	Auto.	GW w/NPG208 (41.23" Long)

CJ: FRONT

REPL. PART#	YEARS	ENGINE	TRANS	DESCRIPTION
5356501	1981	2.5L	Auto.	(30.25" Long)
5360982	1981	2.5L, 4.2L	SR4	(31.75" Long)
	1982-86	4.2L	T4, T5	
5360985	1981	5.2L	Auto.	(32.68" Long)
	1981-86	4.2L	Auto.	
5360986	1981	2.5L, 5.9L	T176	(29.50" Long)
	1982-83	2.5L	T176	CJ-5
	1982-86	2.5L, 4.2L	T4,T5	
	1981-86	4.2L	T176	
	1981-86	Dsl	T176	
5362815	1982-86	2.5L	T176	(27.25" Long)

CJ: REAR

REPL. PART#	YEARS	ENGINE	TRANS	DESCRIPTION
5360987	1981	2.5L, 4.2L	SR4	CJ-7 (20.80" Long)
	1982-86	4.2L	T4, T5	CJ-7
5362276	1981-83	ALL	T176, T4 ,T5	CJ-5 (12.88" Long)
5362277	1981	2.5L, 4.2L	SR4	CJ-6 (30.60" Long)
	1982-86	4.2L	T4, T5	CJ-8
5362278	1981	2.5L, 4.2L	T176	CJ-6, CJ-8 (32.88" Long)
	1982-86	2.5L	T4, T5	CJ-8
5362280	1981-86	4.2L, 5.2L	Auto.	CJ-7 (19.75" Long)
5362281	1981	2.5L, 4.2L,Dsl	T176	CJ-7 (22.90" Long)
		1981-86	4.2L	T4,T5 CJ-7

© 2003 Projekt 4x4

Body

Body 3-1

YJ 3-3
XJ 3-5
CJ 3-9
ZJ 3-13

Back

© 2003 Projekt 4x4

YJ

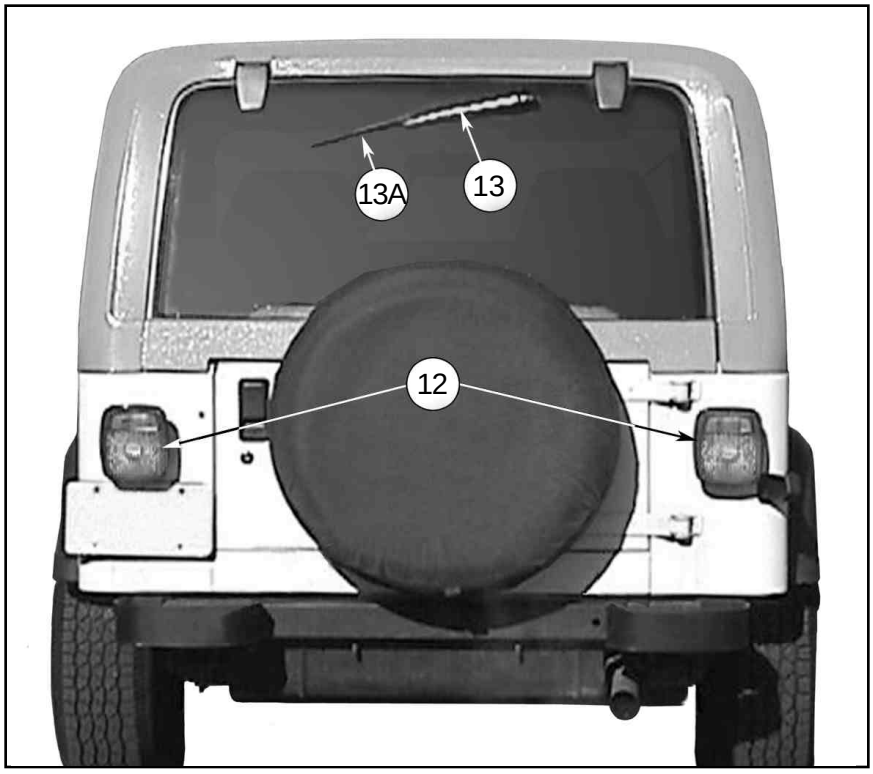

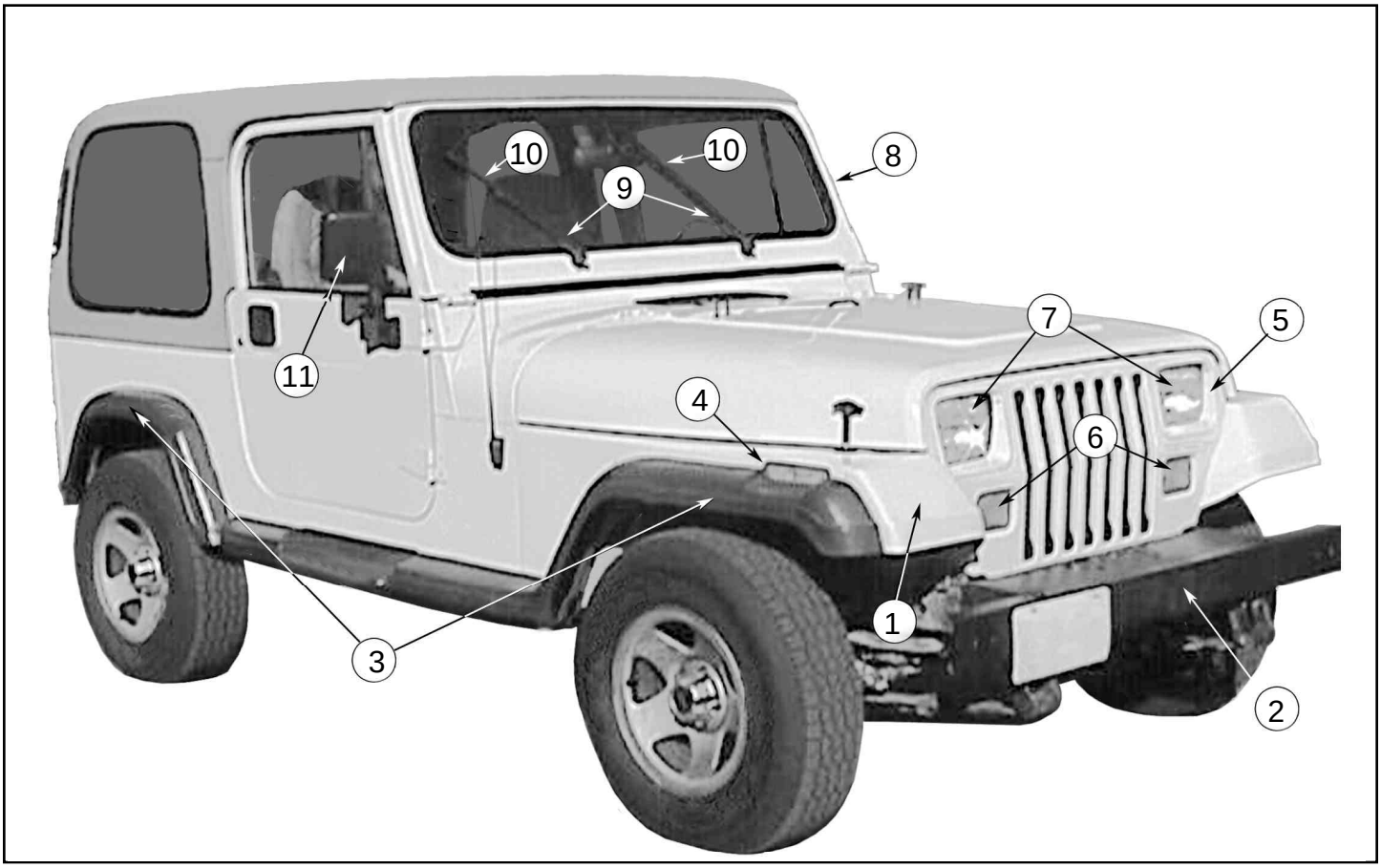

The JEEP® grille is a registered trademark of Daimler Chrysler Corp.

YJ BODY:

NO.	DESCRIPTION	REPLACES PART#:
1.	Fender (Rt.) 1987-90	55013514
	Fender (Lt.) 1987-90	55013515
	Fender (Rt.) 1991-95	55345024
	Fender (Lt.) 1991-95	55345025
2.	Bumper (Blk.) 1987-90	52040026
	Bumper (Blk.) 1991-95	55234777
2a.	Bumper cap (Rt. & Lt.) Blk.	52040027 (NP)
3.	Fender Flare (Front Rt.)	5AH14JX9
	Fender Flare (Front Lt.)	5AH15JX9
	Fender Flare (Rear Rt.)	5AH16JX9
	Fender Flare (Rear Lt.)	5AH17JX9
	Fender Flare Kit (4 flares)	5AHK
4.	Side marker lens	56001424
5.	Headlamp / bezel (Rt.) Chrome	56003104
	Headlamp / bezel (Lt.) Chrome	56003105
6.	Parking lamp (Rt. & Lt.)	56001378
7.	Sealed beam / headlight	153590
7A.	Headlamp seat (Rt.)	56001278
	Headlamp seat (Lt.)	56001279
8.	Windshield Frame	55174576
8A.	W/shield frame glass weather strip	55134655 (NP)
8B.	W/shield frame cowl weather strip	55009127 (NP)
9.	Wiper arm	56030012
10.	Wiper blade	83505425
11.	Mirror (Rt.) Blk. 1987-89	82200834
	Mirror (Lt.) Blk. 1987-89	82200833
	Mirror (Rt.) Chrome 1987-89	82200834C
	Mirror (Lt.) Chrome 1987-89	82200833C
	Mirror (Rt.) Blk. 1990-95	55017542
	Mirror (Lt.) Blk. 1990-95	55017543
	Mirror (Rt.) Chrome 1990-95	55017542C
	Mirror (Lt.) Chrome 1990-95	55017543C
	Mirror head 1987-95	55012573 (NP)
	Mirror arm (Rt.) 1987-95	55012574 (NP)
	Mirror arm (Lt.) 1987-95	55012575 (NP)
	Mirror, low profile (Rt.)	55016210 (NP)
	Mirror, low profile (Lt.)	55024249 (NP)
12.	Tail lamp (Rt.) 1987-90	56002134
	Tail lamp (Lt.)1987-90	56002135
	Tail lamp (Rt.) 1991-95	56016720
	Tail lamp (Lt.) 1991-95	56016721
	Tail lamp (Rt.) 1997-00	56018648 (TJ)
	Tail lamp (Lt.) 1997-00	56018649 (TJ)
	Tail lamp (Rt. & Lt.) Europe 1987-95	5764204
13.	Wiper arm	56030012
13A.	Wiper blade	4389063

© 2003 Projekt 4x4

XJ

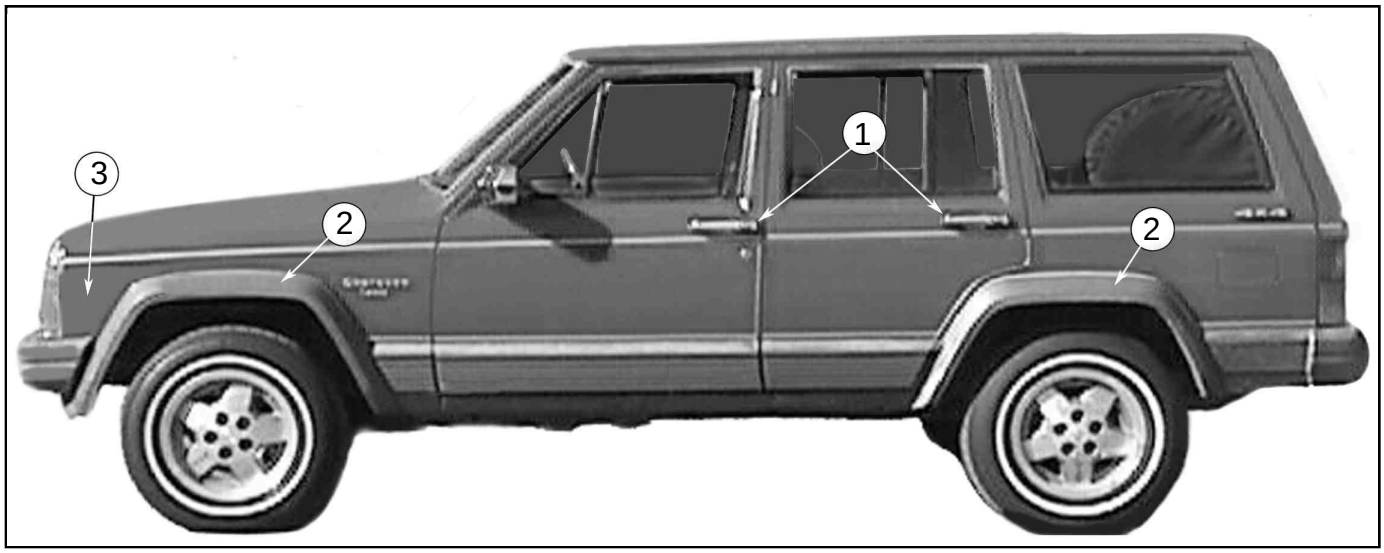

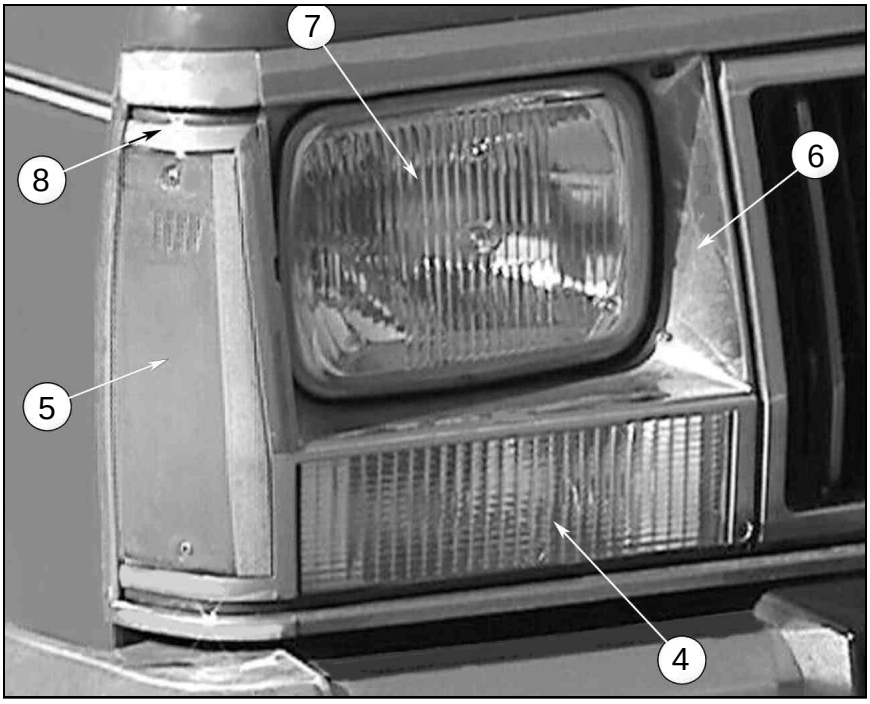

The JEEP® grille is a registered trademark of Daimler Chrysler Corp.

XJ BODY:

NO.	DESCRIPTION	REPLACES PART#:
1.	Door handle (Rt.) Black	55024926
	Door handle (Lt.) Black	55024927
2.	Fender flare (Front Rt.)	5AG24JX9
	Fender flare (Front Lt.)	5AG25JX9
	Fender flare (Rear Rt.)	5AG30JX9
	Fender flare (Rear Lt.)	5AG31JX9
	Fender Flare kit	5AGK
3.	Fender (Rt.) 1984-93	55029858
	Fender (Lt.) 1984-93	55029859
	Fender (Rt.) 1994-96	55235526
	Fender (Lt.) 1994-96	55235527
4.	Parking lamp (Rt.)	56000098
	Parking lamp (Lt.)	56000099
	Parking lamp (Rt.) Europe	56000852
	Parking lamp (Lt.) Europe	56000853
5.	Side marker lens (Rt.)	56000110
	Side marker lens (Lt.)	56000111
	Side marker lens (Rt.) Europe	56000638
	Side marker lens (Lt.) Europe	56000639
6.	Headlamp bezel (Rt.) gray 1984-90	55000682
	Headlamp bezel (Lt.) gray 1984-90	55000683
	Headlamp bezel (Rt.) Chr. 1984-90	55002244
	Headlamp bezel (Lt.) Chr. 1984-90	55002245
	Headlamp bezel (Rt.) 1984-90 *	55008046
	Headlamp bezel (Lt.) 1984-90 *	55008047 (* = XJ Wagoneer only)
	Headlamp bezel (Rt.) Blk. 1991-96	55034074
	Headlamp bezel (Lt.) Blk. 1991-96	55034075
	Headlamp bezel (Rt.) Blk./Chr. 1991-96	55034078
	Headlamp bezel (Lt.) Blk./Chr. 1991-96	55034079
	Headlamp bezel (Rt.) Flat Blk. 1991-96	55054930
	Headlamp bezel (Lt.) Flat Blk. 1991-96	55054931
7.	Headlamp (Rt.& Lt.) 1984-90	8134319
	Headlamp (Rt. & Lt.) 1991-96	153590
8.	Corner molding (Rt.)	55002308
	Corner molding (Lt.)	55002309
9.	Grille (Blk.) 1984-86	55000153
	Grille (Blk./Blk.) 1987-90	55013145
	Grille (Chr./Blk.) 1984-90	55002229
	Grille (Gray/Blk.) 1984-90	55013144
	Grille (Blk.) 1991-92	55034044
	Grille (Blk.) 1993-96	55054945
	Grille (Chr./Blk.) 1991-96	55034046
	Grille (Blk.-“Country”) 1997-00	5EM65DX8
	Grille (Blk.-“Sport” & “SE”) 1997-00	55055150
10.	Bumper (Black) 1984-90	52000185
	Bumper (Black) 1991-96	55234551

© 2003 Projekt 4x4

XJ

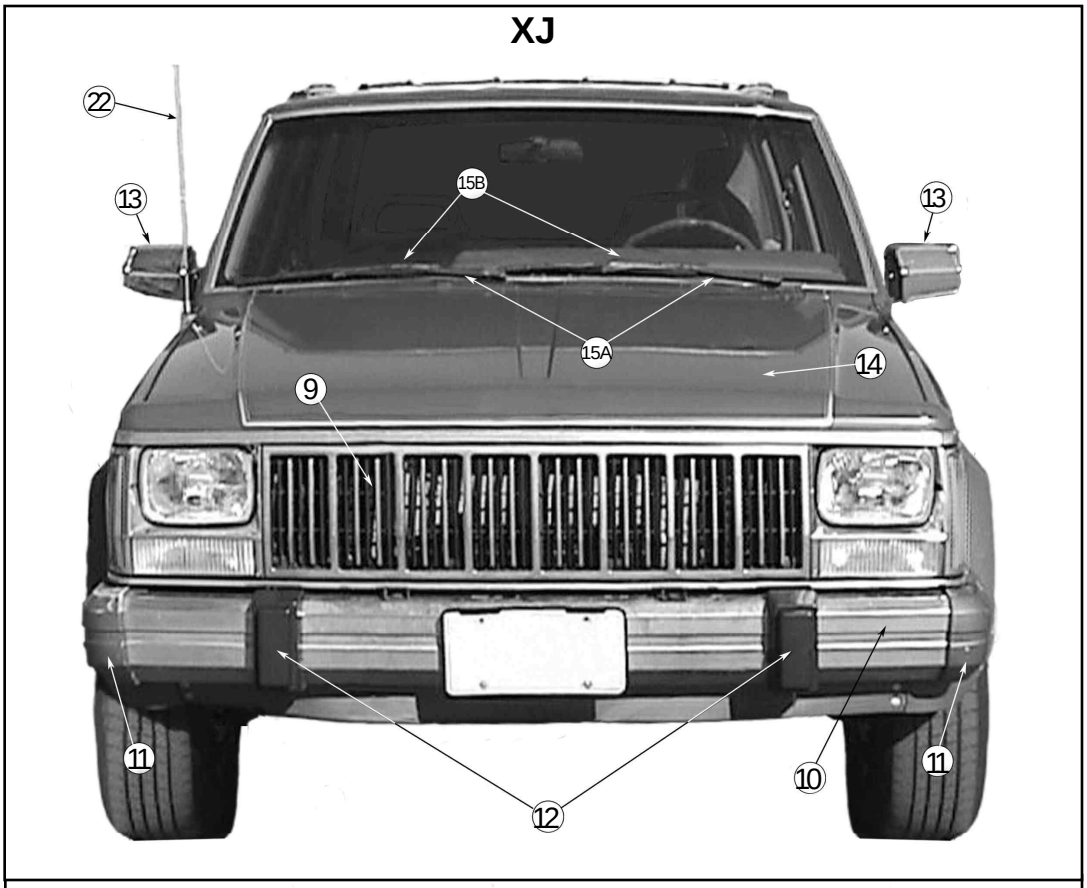

The JEEP® grille is a registered trademark of Daimler Chrysler Corp.

XJ BODY:

	Bumper (Chrome) 1984-90	52000177
	Bumper (Chrome) 1991-96	55234550
11.	Bumper cap (Rt.) Blk. 1984-90	52000178
	Bumper cap (Lt.) Blk. 1984-90	52000179
	Bumper cap (Rt.) Gray 1984-90	55015786
	Bumper cap (Rt.) Gray 1984-90	55015787
	Bumper cap (Rt.) Blk. 1991-96	55234544
	Bumper cap (Lt.) Blk. 1991-96	55234545
	Bumper cap (Rt.) Pearlstone 1991-96	5CU46RV1
	Bumper cap (Lt.) Pearlstone 1991-96	5CU47RV1
12.	Bumper guard (Rt.)	52000462
	Bumper guard (Lt.)	52000463
13.	Mirror (Rt.) 1984-90	55027208
	Mirror (Lt.) 1984-90	55027207
	Mirror (Lt.) Chrome 1984-90	55002891
14.	Hood 1984-86	57000051
	Hood 1987-90	57001769
	Hood 1991-96	55254574
15.	Wiper motor 1984-90	56001402 (NP)
	Wiper motor 1991-96	4723460 (NP)
15A.	Wiper arm	56001132
15B.	Wiper blade 1984-93	56001133
	Wiper blade 1994-96	83505422
16.	Bumper (Black) 1984-90	55026257
	Bumper (Black) 1984-90	55234618
	Bumper (Chrome) 1991-96	55026259
	Bumper (Chrome) 1991-96	55234619
17.	Bumper guard (Rt.)	52000468
	Bumper guard (Lt.)	52000469
18.	Tail lamp (Rt.) 1984-90	83504316
	Tail lamp (Lt.) 1984-90	83504317
	Tail lamp (Rt.) 1991-96	4720500
	Tail lamp (Lt.) 1991-96	4720501
	Tail lamp (Rt.) Europe	4720498
	Tail lamp (Lt.) Europe	4720499
19.	Bumper cap (Rt.) Blk. 1984-86	52000192
	Bumper cap (Lt.) Blk. 1984-86	52000193
	Bumper cap (Rt.) Blk. 1987-90	55022076
	Bumper cap (Lt.) Blk. 1987-90	55022077
	Bumper cap (Rt.) Blk. 1991-96	55029244
	Bumper cap (Lt.) Blk. 1991-96	55029245
20.	Lift gate 1984-85	55001025
	Lift gate 1986-90	55009255
	Lift gate 1991-93	55027416
	Lift gate 1994-96	55345947
21.	Wiper motor 1984-90	56000701 (NP)
	Wiper motor 1991-96	56006336 (NP)
21A.	Wiper arm	56000598
21B.	Wiper blade	55000299
22.	Power Antenna 1987-96	56003151

© 2003 Projekt 4x4

CJ

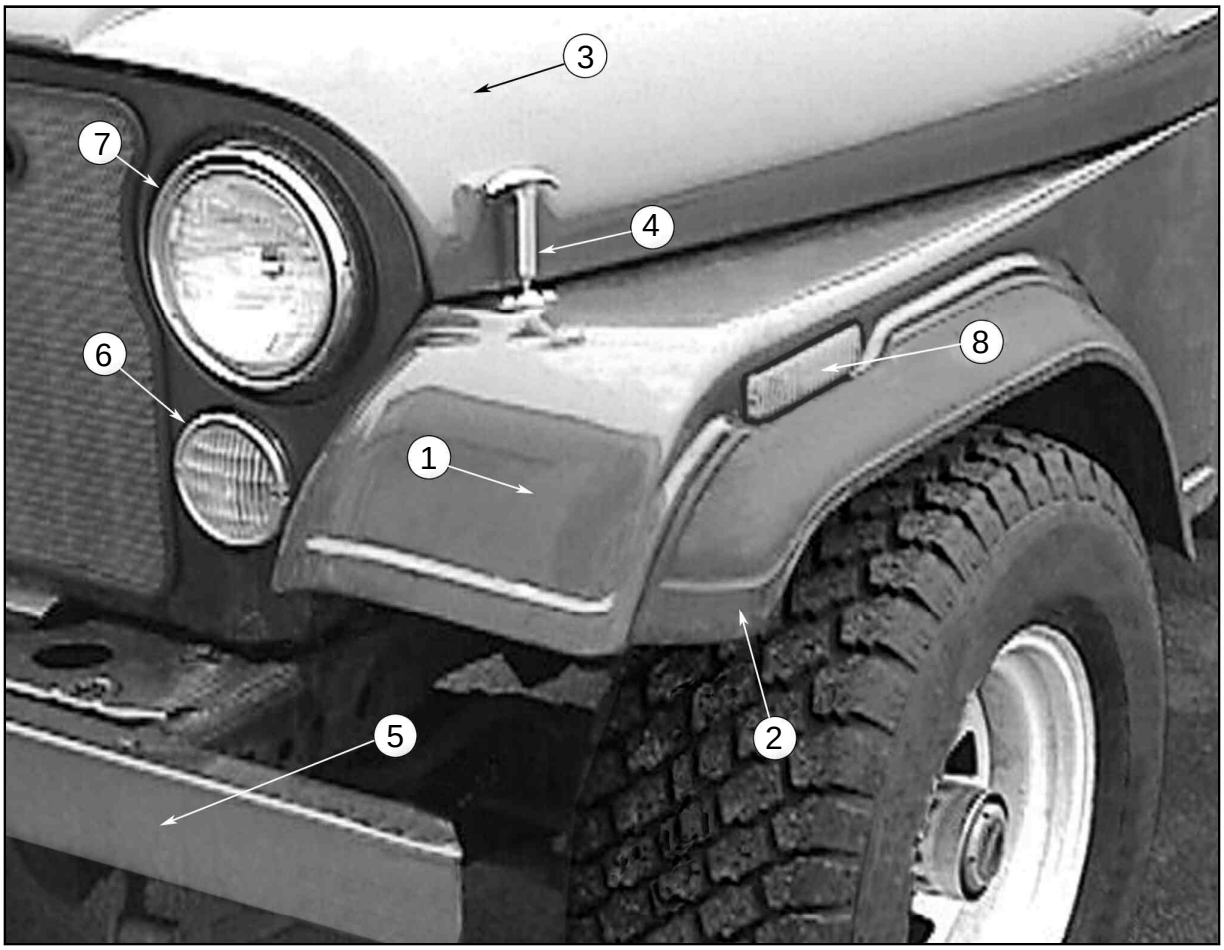

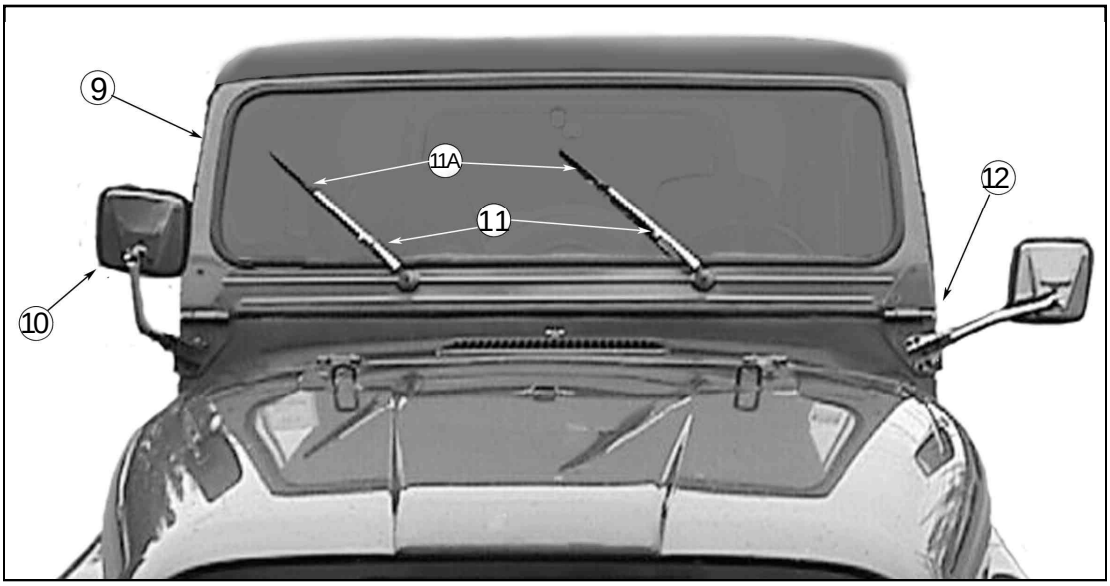

The JEEP® grille is a registered trademark of Daimler Chrysler Corp.

CJ BODY:

NO.	DESCRIPTION	REPLACES PART#:
1.	Fender (1972-81) Rt.	8133094
	Fender (1972-81) Lt.	5758618
	Fender (1982-86) Rt.	5758964
	Fender (1982-86) Lt.	5758965
2.	Fender flare (1972-86) Rt.	5455072
	Fender flare (1972-86) Lt.	5455071
	Fender flare kit (1972-86) (Includes 4 flares & mounting hardware)	8997109
3.	Hood (1974-81)	986220
	Hood (1982-86)	5761180
4.	Hood catch kit (1942-86) Chrome	HC-1
	Hood catch kit (1942-86) Black	HC-2
	Hood catch kit (1942-86) Stainless	HC-3
5.	Bumper	5355342
6.	Parking lamp (1976-86)	5752771
	Parking lamp (1969-75)	989852
7.	Headlamp bezel / rim (1976-86)	5460087
7A.	Headlamp retaining ring (1976-86)	8128749
7B.	Headlamp / sealed beam (1976-86)	8124687
8.	Side marker lens, amber (1972-86) Front	994020
	Side marker lens, red (1972-80) Rear	994021
9.	Windshield frame (1976-86)	5758971
	Windshield frame (1969-75) w/ bottom-mounted wipers	987996
	Windshield frame (1955-68) w/ top-mounted wipers	973727
9A.	Glass weather strip	5453949
9B.	Cowl weather strip	5453950
10.	Side mirror kit, Lt. (Black)	5455301K
	Side mirror kit, Rt. (Black)	5455302K
	Side mirror kit, Rt. & Lt. (Black)	5462736K
	Side mirror kit, Rt. (Chrome)	5751195K
	Side mirror kit, Lt. (Chrome)	5751194K
	Side mirror kit, Rt. & Lt. (Chrome)	5751193K
	Side mirror kit, Rt. (Stainless)	5751195STK
	Side mirror kit, Lt. (Stainless)	5751194STK
	Side mirror kit, Rt. & Lt. (Stainless)	5751193STK
11.	Wiper arm (1968-86) Bright	5758005
	Wiper arm (1968-86) Black	5762337
11A.	Wiper blade (1974-86) Bright	5758032
	Wiper blade (1974-86) Black	5762336
	Wiper blade (1972-86) Metal	973819
11B.	Wiper linkage kit (Includes link, arm, pivot, spacer, clip and gasket)	5453958K (NP)

© 2003 Projekt 4x4

CJ

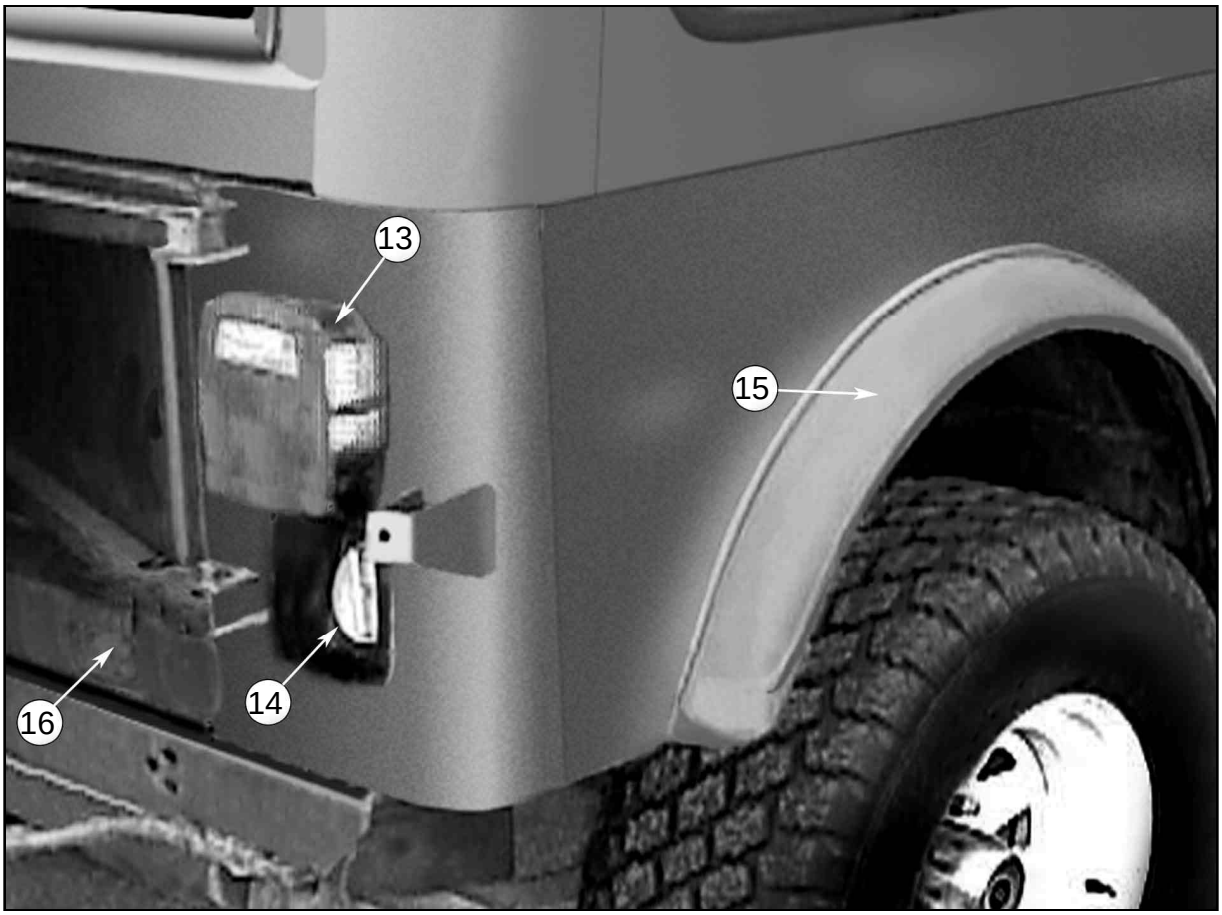

The JEEP® grille is a registered trademark of Daimler Chrysler Corp.

CJ BODY:

11C.	Wiper motor (1972-82)	5453956 (NP)
	Wiper motor (1983-86)	5763696 (NP)
12.	Windshield hinge (1976-86) Rt.	5462424
	Windshield hinge (1976-86) Lt.	5462425
13.	Tail lamp (1972-80) Rt.	5457198
	Tail lamp (1972-80) Rt. Chrome	5457198C
	Tail lamp (1972-80) Lt.	5457197
	Tail lamp (1972-80) Lt. Chrome	5457197C
	Tail lamp (1981-86) Rt.	5758254
	Tail lamp (1981-86) Rt. Chrome	5758254C
	Tail lamp (1981-86) Lt.	5758255
	Tail lamp (1981-86) Lt. Chrome	5758255C
14.	Gas cap	5358207
	Gas cap (Locking)	5350897
15.	Fender flare (1972-86) Rt.	5455074
	Fender flare (1972-86) Lt.	5455073
	Fender flare kit (Includes 4 flares and mounting hardware)	8997109
16.	Tail gate (1976-86)	5454025
	Tail gate cable (1976-86)	5752617 (NP)

© 2003 Projekt 4x4

ZJ

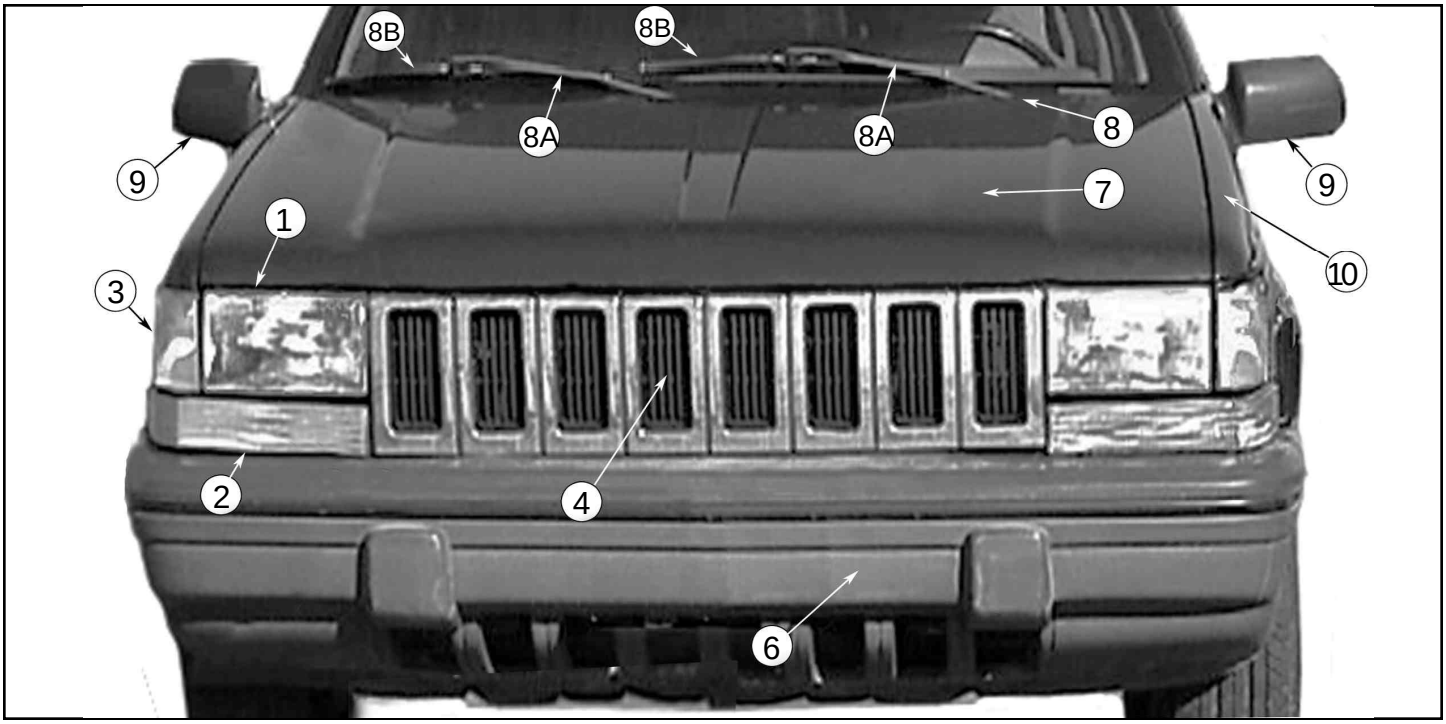

The JEEP® grille is a registered trademark of Daimler Chrysler Corp.

ZJ BODY:

NO.	DESCRIPTION	REPLACES PART#:
1.	Headlamp (Rt.) 1993-96	55055118
	Headlamp (Lt.) 1993-96	55055119
	Headlamp (Rt.) 1997-98	55055118AB
	Headlamp (Lt.) 1997-98	55055119AB
	Headlamp (Rt.) Europe	55054576
	Headlamp (Lt.)Europe	55054577
2.	Parking lamp (Rt.)	56005104
	Parking lamp (Lt.)	56005105
	Parking lamp (Rt.)Europe	55054586
	Parking lamp (Lt.) Europe	55054587
3.	Turn lamp (Rt.) 1993-96	56005098
	Turn lamp (Lt.) 1993-96	56005099
	Turn lamp (Rt.) 1997-98	56005098AB
	Turn lamp (Lt.) 1997-98	56005099AB
	Turn lamp (Rt.) Europe 1993-96	55054580
	Turn lamp (Lt.) Europe 1993-96	55054581
	Turn lamp (Rt.) Europe 1997-98	55054580AB
	Turn lamp (Lt.) Europe 1997-98	55054581AB
4.	Grille (black) up to 7/16/92	5AR39LX8
	Grille (black) 1993-96	5DF54MX8
	Grille (Chrome) 1993-96	55054890
5.	Fog lamp (Rt. & Lt.)	4713582 (NP)
5A.	Fog lamp lens	4713584 (NP)
6.	Bumper (Limited & Orvis) w/fog lamps	4713455
	Bumper (Limited) w/o fog lamps	4761569
7.	Hood 1993-95	55255640
8.	Wiper Motor 1993-95	56005181 (NP)
8A.	Wiper arm 1993-96	55154983
	Wiper arm 1997-98	55154983AB
8B.	Wiper blade 1993	56005181
	Wiper blade 1994-98	56005181AB
9.	Mirror (Rt.) electric	55154800
	Mirror (Lt.) electric	55154801
	Mirror (Rt.) electric-heated	55154802
	Mirror (Lt.) electric-heated	55154803
10.	Fender (Rt.)	55031834
	Fender (Lt.)	55031835
11.	Tail lamp (Rt.) 1993	56005110
	Tail lamp (Lt.) 1993	56005111
	Tail lamp (Rt.) 1994-96	55155110
	Tail lamp (Lt.) 1994-96	55155111
	Tail lamp (Rt.) 1993-98 Europe	55155116
	Tail lamp (Lt.) 1993-98 Europe	55155117
12.	Wiper arm 1993-96	55154966
	Wiper arm 1997-98	55154966AB
12A.	Wiper blade 1993-96	55154727
	Wiper blade 1997-98	55155454
13.	Lift gate support (Rt.)	G0004856
	Lift gate support (Lt.)	G0004857

© 2003 Projekt 4x4

Brake

Brakes 4-1

YJ Front Disc 4-3
TJ Front Disc 4-3
XJ Front Disc 4-4
ZJ Front Disc 4-5
YJ Rear Drum 4-7
TJ Rear Drum 4-7
XJ Rear Drum 4-8
CJ Rear Drum 4-9
ZJ Rear Disc 4-9
Front Wheel Cylinder 4-10
Rear Wheel Cylinder 4-10
Master Cylinder 4-11
Brake Booster 4-12

Back

© 2003 Projekt 4x4

FRONT DISC BRAKE

1

2

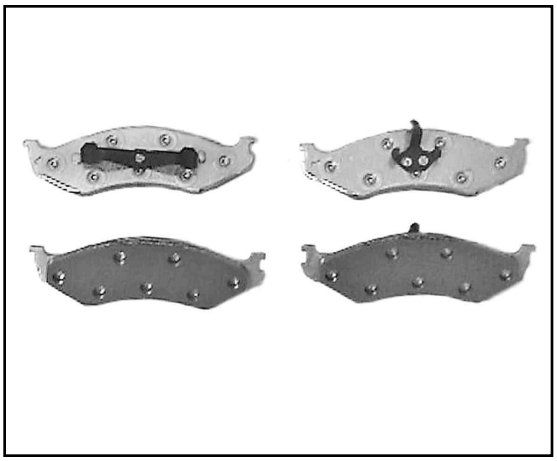

4

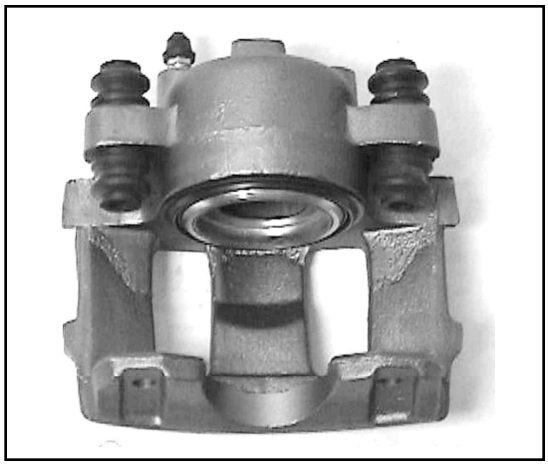

5

6

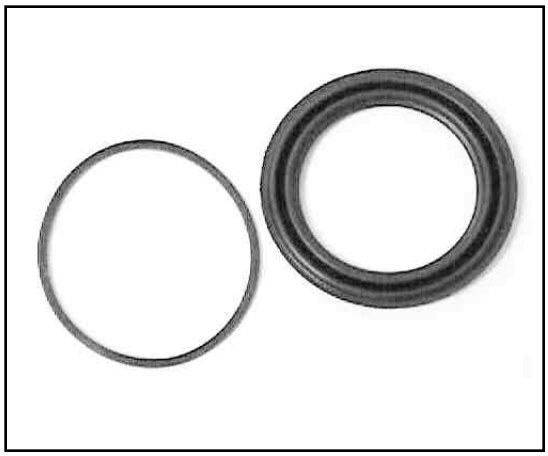

7

© 2003 Projekt 4x4

YJ: FRONT DISC BRAKE

NO.	DESCRIPTION	REPLACES PART#:
1.	Brake rotor (1987-89)	3251156
	Brake rotor (1990-93)	52005000
	Brake rotor (1994-95)	52008440
2.	Hub & bearing assy. (1987-89)	53000228
	Hub & bearing assy. (1990-95)	53007449
3.	Bolt, hub & bearing (1987-89)	3238138
	Bolt, hub & bearing (1990-95)	53007463
4.	Brake pad set (1987-89)	83501167
	Brake pad set (1990-93)	5252531
	Brake pad set (1994-95)	4713175
5.	Caliper assy. (1987-89), Rt.	8133846
	Caliper assy. (1987-89), Lt.	8133847
	Caliper assy. (1990-95), Rt.	5252984
	Caliper assy. (1990-95), Lt.	5252985
6.	Caliper repair kit (1987-89)	8133845
	Caliper repair kit (1990-95)	5252614
7.	Caliper seal kit	8133852
8.	Caliper bleeder screw	3203313
9.	Caliper pin (1987-89)	83504655
	Caliper pin (1990-95)	5253000
10.	Caliper bushing (1987-89)	52001700
	Caliper bushing (1990-95)	4383471
11.	Caliper sleeve (1987-89)	52001701
	Caliper sleeve (1990-95)	4423573
12.	Anti-rattle clip	3239865

TJ: FRONT DISC BRAKE

NO.	DESCRIPTION	REPLACES P ART#
1.	Brake rotor	52008440
2.	Hub & bearing assy.	53007449
3.	Bolt, hub & bearing	53007463
4.	Brake pad set	4883344
5.	Caliper assy., Rt.	5252984
	Caliper assy., Lt.	5252985
6.	Caliper repair kit	5252614
7.	Caliper seal kit	8133852
8.	Caliper bleeder screw	3203313
9.	Caliper pin	5253000
10.	Caliper bushing	4383471
11.	Caliper sleeve	4423573
12.	Anti-rattle clip	3239865

© 2003 Projekt 4x4

XJ 1984 - 98: FRONT DISC BRAKE

NO.	DESCRIPTION	REPLACES PART#:
1.	Brake rotor (1984-89)	3251156
	Brake rotor (1994-98)	52005000
2.	Hub & bearing assy. (1984-89)	53000228
	Hub & bearing assy. (1990-98)	53007449
3.	Bolt, hub & bearing (1984-89)	3238138
	Bolt, hub & bearing (1990-98)	53007463
4.	Brake pad set (1984-89)	83501167
	Brake pad set (1990-93)	5252531
	Brake pad set (1994-98)	4778058
	Brake pad set, Titanium (H.D.)	4778058TI
5.	Caliper assy. (1984-89), Rt.	8133846
	Caliper assy. (1984-89), Lt.	8133847
	Caliper assy. (1990-98), Rt.	5252984
	Caliper assy. (1990-98), Lt.	5252985
6.	Caliper repair kit (1984-89)	8133845
	Caliper repair kit (1990-98)	5252614
7.	Caliper seal kit	8133852
8.	Caliper bleeder screw	3203313
9.	Caliper pin (1984-89)	83504655
	Caliper pin (1990-98)	5253000
10.	Caliper bushing (1984-89)	52001700
	Caliper bushing (1990-98)	4383471
11.	Caliper sleeve (1984-89)	52001701
	Caliper sleeve (1990-98)	4423573
12.	Anti-rattle clip	3239865

© 2003 Projekt 4x4

ZJ: FRONT DISC BRAKE

NO.	DESCRIPTION	PART#
1.	Brake rotor	52008440
2.	Hub & bearing assy.	53007449
3.	Bolt, hub & bearing	53007463
4.	Brake pad set (1993-96)	4778058
	Brake pad set, Titanium (H.D.)	4778058TI
	Brake pad set (1997-98)	4883344
5.	Caliper assy., Rt.	5252984
	Caliper assy., Lt.	5252985
6.	Caliper repair kit	5252614
7.	Caliper seal kit	8133852
8.	Caliper bleeder screw	3203313
9.	Caliper pin	5253000
10.	Caliper bushing	4383471
11.	Caliper sleeve	4423573
12.	Anti-rattle clip	3239865

© 2003 Projekt 4x4

REAR DRUM

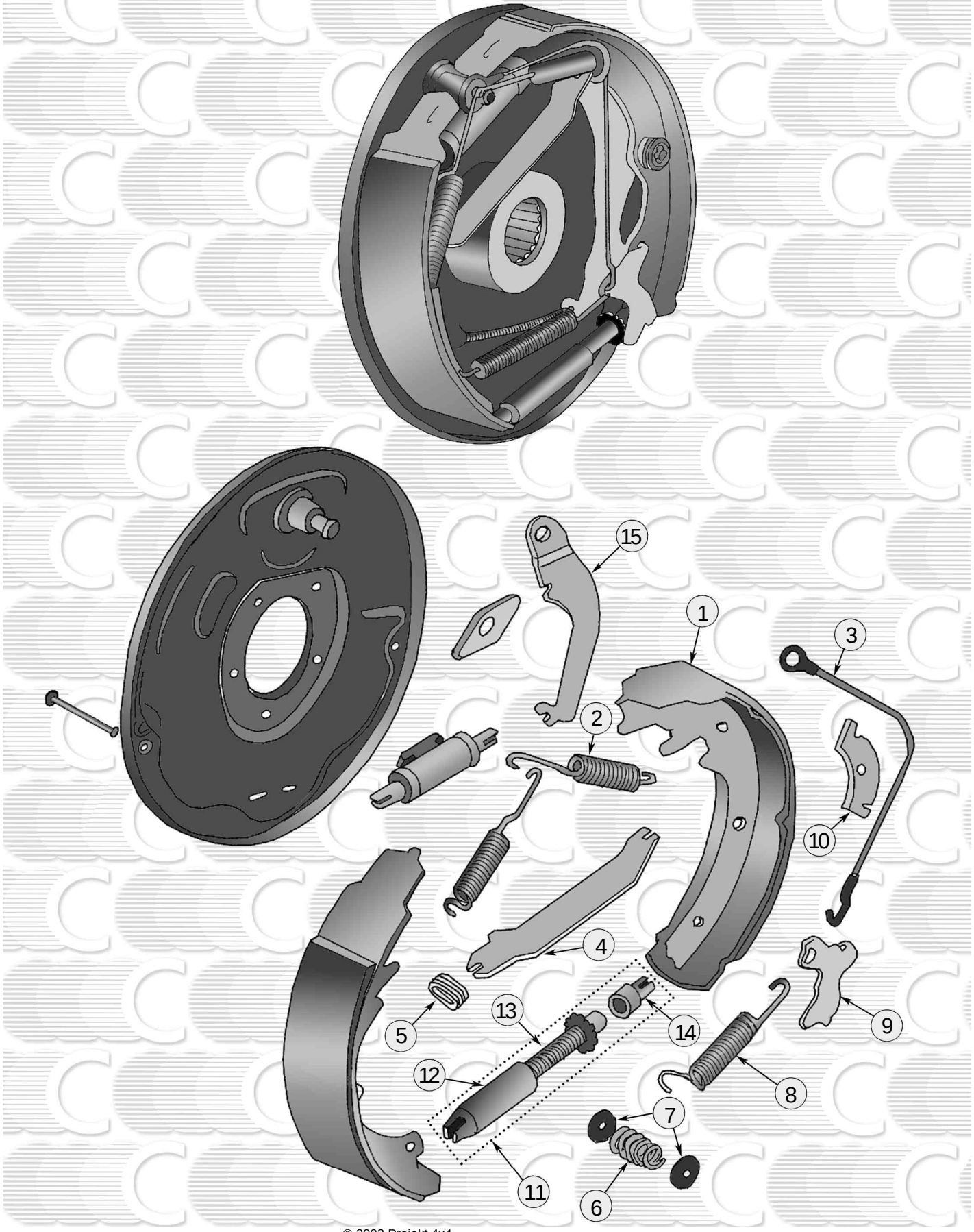

© 2003 Projekt 4x4

YJ: REAR BRAKE DRUM

(w/ model 35 rear axle)

NO.	DESCRIPTION	REPLACES PART#:
1.	Brake shoes (1987-89)	8133818
	Brake shoes (1990-93)	4423606
	Brake shoes (1994-95)	4723367
1A.	Brake drum (1987-89)	52001151
	Brake drum (1990-95)	52005350
2.	Return spring (1987-89)	3112780
	Return spring (1990-95)	2881676
3.	Adjusting cable (1987-89)	3201027
	Adjusting cable (1990-95)	3461662
4.	Parking strut (1987-89)	3112778
5.	Brake spring (1987-89)	3112779
	Brake spring (1990-95)	4313079
6.	Spring (1987-89)	3205979
	Spring (1990-95)	4313062
7.	Cup (1987-89)	89259
8.	Spring (1987-89)	3201937
	Spring (1990-95)	4313069
9.	Adjuster lever (1987-89) Rt.	3201030
	Adjuster lever (1987-89) Lt.	3201029
	Adjuster lever (1990-95)	3461665
10	Guide (1987-89)	3201947
	Guide (1990-95)	2260793
11.	Adjuster (1987-89), Rt.	52001216
	Adjuster (1987-89), Lt.	52001215
12.	Nut, adjuster pivot screw (1990-95), Rt.	2944692
	Nut, adjuster pivot screw (1990-95), Lt.	2944693
13.	Screw, adjuster pivot (1990-95), Rt.	2881686
	Screw, adjuster pivot (1990-95), Lt.	2881687
14.	Button, adjuster (1990-95)	2944586
15.	Lever, parking brake (1990-95), Rt.	4313810
	Lever, parking brake (1990-95), Lt.	4313811

TJ: REAR BRAKE DRUM

(w/ model 35 rear axle)

NO.	DESCRIPTION	REPLACES PART#:
1.	Brake shoes	4723367
1.A	Brake drum	52005350
2.	Return spring	2881676
3.	Adjusting cable	3461662
6.	Spring	4313062
8.	Spring	4423085
9.	Adjuster lever	4761759
10.	Guide	2260793

© 2003 Projekt 4x4

12.	Nut, adjuster pivot screw, Rt.	2944692
	Nut, adjuster pivot screw, Lt.	2944693
13.	Screw, adjuster pivot, Rt.	2881686
	Screw, adjuster pivot, Lt.	2881687
14.	Button, adjuster	2944586
15.	Lever, parking brake, Rt.	4313810
	Lever, parking brake, Lt.	4313811

XJ 1984-89:REAR BRAKE DRUM

(w/ model 35 or 8.25 rear axle)

NO.	DESCRIPTION	REPLACES PART#:
1.	Brake shoes	8133818
1A.	Brake drum	52001151
2.	Return spring	3112780
3.	Adjusting cable	3201027
4.	Parking strut (1984-86)	3112778
	Parking strut (1986) MJ only	83502899
5.	Brake spring	3112779
	Brake spring (1987-90) w/ABS	83504908
6.	Spring	3205979
7.	Cup	89259
8.	Spring	3201937
	Spring (1986) MJ only	943136
9.	Adjuster lever, Rt.	3201030
	Adjuster lever, Lt.	3201029
10.	Guide	3201947
11.	Adjuster, Rt.	52001216
	Adjuster, Lt.	52001215

XJ / ZJ 1990-99:REAR BRAKE DRUM

(w/ model 35 or 8.25"rear axle)

NO.	DESCRIPTION	REPLACES PART#:
1.	Brake shoes w /9" (1990-93)	4423606
	Brake shoes w/ 9" (1994-99)	4723367
	Brake shoes w/ 10" (1994-96)	4713365
	Brake shoes w/ 10" (1997-99)	4796310
1A.	Brake drum	52005350
	Brake drum w/10" brakes	52007502
2.	Return spring w/ 9"	2881676
	Return spring w/ 10"	3112780
3.	Adjusting cable w/ 9"	3461662
	Adjusting cable w/ 10"	4713350
5.	Brake spring w/ 9"	4313079
	Brake spring w/ 10"	83504918
6.	Spring w/ 9"	4313062
8.	Spring w/ 9"	4423085
9.	Adjuster lever w/ 9" (1990-93)	3461665

© 2003 Projekt 4x4

	Adjuster lever w/ 9" (1994-99)	4761759
	Adjuster lever w/ 10", Rt.	4728546
	Adjuster lever w/ 10", Lt.	4728547
10.	Guide w/ 9"	2260793
	Guide w/ 10"	3201947
12.	Nut, adjuster pivot screw w/ 9", Rt.	2944692
	Nut, adjuster pivot screw w/ 9", Lt.	2944693
13.	Screw, adjuster pivot w/ 9", Rt.	2881686
	Screw, adjuster pivot w/ 9", Lt.	2881687
14.	Button, adjuster	2944586
15.	Lever, parking brake w/ 9", Rt.	4313810
	Lever, parking brake w/ 9", Lt.	4313811

CJ: REAR BRAKE DRUM

(W/ model 20 rear axle)

NO.	DESCRIPTION	REPLACES PART#:
1.	Brake shoes (new)	8133818
1A.	Brake drum	5359028
2.	Return spring	3112780
3.	Adjusting cable	3201027
4.	Parking strut	3112778
5.	Brake spring	3112779
6.	Spring	3205979
7.	Cup	89259
8.	Spring	3201937
9.	Adjuster lever, Rt.	3201030
	Adjuster lever, Lt.	3201029
10.	Guide	3021947
11.	Adjuster, Rt.	52001216
	Adjuster, Lt.	52001215

ZJ 1993-99: REAR DISC BRAKE (Not Pictured)

(w/ model 35 axle)

NO.	DESCRIPTION	REPLACES PART#:
1.	Brake rotor	52008184
2.	Brake pad (1993-94 up to VIN# 358321)	4762101
	Brake pad (1994-96 aft. VIN# 358321)	4796344
	Brake pad (1997-99)	4883717AA
3.	Caliper, Rt.	4762102
	Caliper, Lt.	4762103
4.	Piston	4762111
5.	Caliper repair kit	4762110
6.	Caliper pin	5253000
7.	Caliper pin sleeve	4762105
8.	Parking brake shoe (1993-94)	4762114
	Parking brake shoe (1994-99 aft. VIN# 358321)	4796337

© 2003 Projekt 4x4

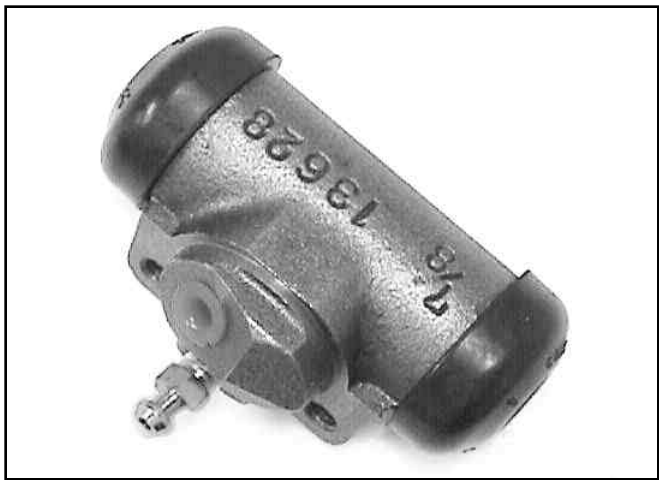

FRONT WHEEL CYLINDER:

REPLACES PART#	MODEL	YEAR	DESCRIPTION
8124557	SJ	1974-76	left
8124558	SJ	1974-76	right
8124794	CJ	1974-80	right
8124795	CJ	1974-80	left

REAR WHEEL CYLINDER:

(*)=Cylinder repair kit

REPLACES PART#	MODEL	YEAR	DESCRIPTION
8129723	SJ	1974-90	both sides
3225196	CJ	1974-86	right
3225197	CJ	1974-86	left
52000848	YJ	1987-89	right
52000848	XJ	1984-90	right
52000848	XJ, ZJ	1991-96	right w/ 10" brakes
52000849	YJ	1987-89	left
52000849	XJ	1984-90	left
52000849	XJ, ZJ	1991-96	left w/ 10" brakes
*83500987	XJ, YJ, ZJ	1984-96	repair kit for 52000848 & 52000849
4313056	XJ	1990-96	both sides, w/ 0" brakes w/ ABS
*5252631	XJ	1990-96	repair kit for 4313056
4423601	YJ	1990-95	both sides w/ 9" w/o ABS
4423601	XJ, TJ	1991-00	both sides w/ 9" w/o ABS
*5252630	XJ, YJ, TJ	1990-00	repair kit for 4423601

© 2003 Projekt 4x4

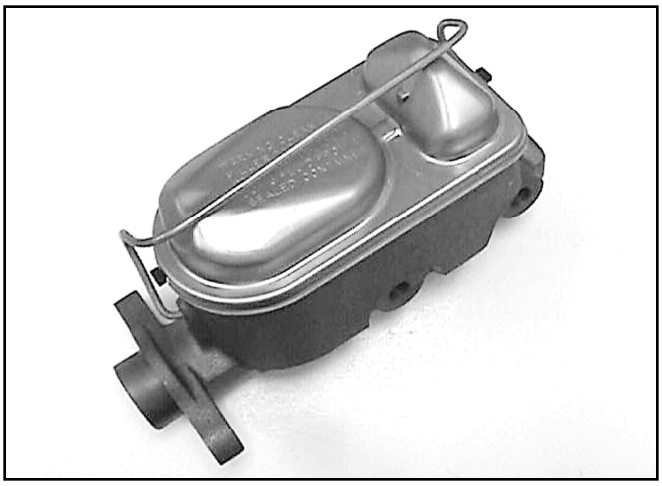

MASTER CYLINDER:

REPLACES PART#	MODEL	YEAR	DESCRIPTION
8133316	SJ	1981-90	
8127792	CJ	1977-78	w/ drum, w/o power
5359552	CJ	1978-81	w/o power
8134270	CJ	1982-83	w/o power
5364779	CJ	1983-86	w/o power
83500995	CJ	1983-86	w/ power
3241807	XJ	1984-89	
5252622	XJ	1987-94	w/o ABS
4761941	XJ	1995-00	
4713076	XJ	1992-93	w/ ABS
5252623	XJ	1990-94	export-gas
5252624	XJ	1990-94	export-diesel
3241807	YJ	1987-89	
5252626	YJ	1990-95	w/o ABS
4761940	YJ	1995	w/ 4.0L
4713076	ZJ	1992-93	w/ ABS
4761941	ZJ	1995-98	

© 2003 Projekt 4x4

BRAKE BOOSTER / POWER SECTION:

REPLACES PART#	MODEL	YEAR	DESCRIPTION
8133909	CJ	1982-86	
83500986	SJ	1981-90	
83502846	YJ	1987-89	
4637862	YJ	1991-95	w/o ABS
4761785	YJ	1995	w/ 4.0L
83501196	XJ	1984-86	
83501533	XJ	1987-90	w/ gas
83501534	XJ	1987-90	w/ diesel
4637769	XJ	1991-94	
4761782	XJ	1995-96	w/ diesel
4761788	XJ	1995-96	w/ gas
4761786	ZJ	1995-98	

© 2003 Projekt 4x4

Clutch

Clutch 5-1

Master Clutch Kit 5-2
Clutch Kit 5-4
Clutch Control Unit 5-6
Clutch Master Cylinder 5-7
Clutch Slave Cylinder 5-7
Clutch Linkage 5-9

Back

© 2003 Projekt 4x4

Clutch

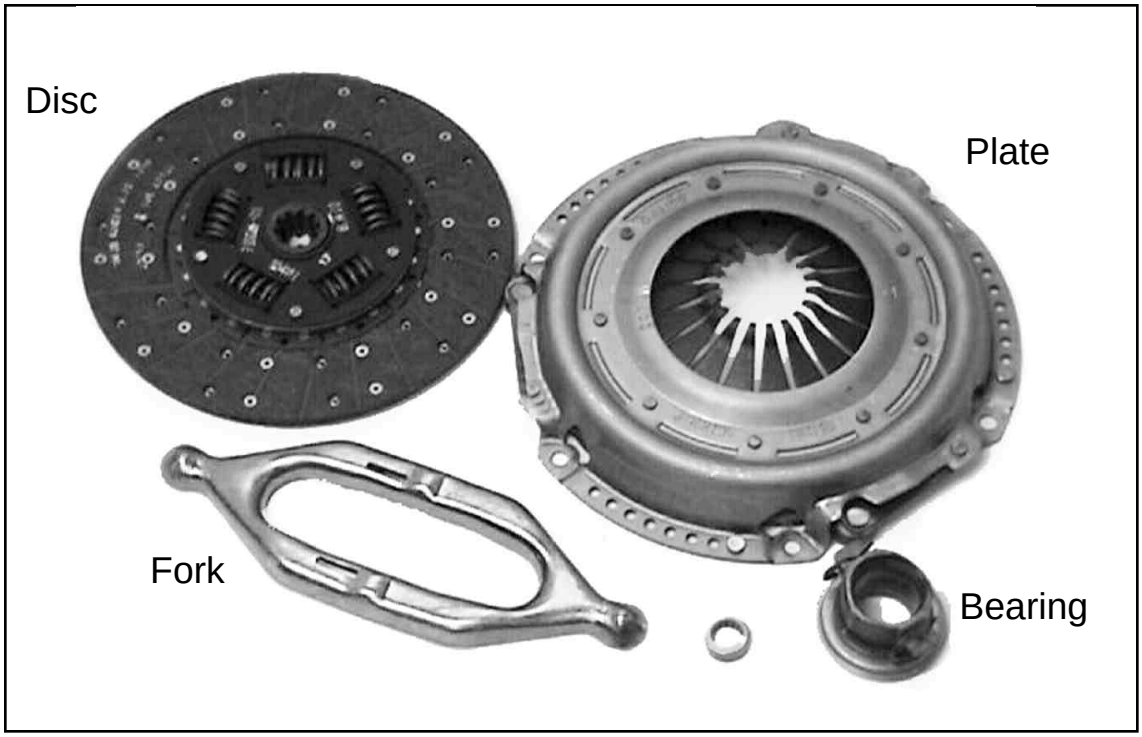

MASTER CLUTCH KITS:

KIT NUMBER	KIT COMPONENTS	VEHICLES	YEAR	ENG. TYPE
XY8790F	1-53003006 Plate	XJ, YJ	1987-90	2.5L
	1-53004538 Disc			
	1-3250005 Pilot / Maindrive			
	1-83503384 Clutch control unit			
XY8789SP	1-53004678 Plate	XJ, YJ	1987-89	4.0L, 4.2l w/ BA10/5
	1-53004679 Disc			
	1-33004041 Pilot / Maindrive			
	1-83503383 Clutch control unit			
XY8990SA	1-53004678 Plate	XJ, YJ	1989-90	4.0L, 4.2L w/ AX/15
	1-53004679 Disc			
	1-33004041 Pilot / Maindrive			
	1-5252137 Clutch control unit			
XY1991F	1-4626213C Plate	XJ, YJ	1991	2.5L
	1-53007584 Disc			
	1-3250005 Pilot / Maindrive			
	1-53006068 Clutch control unit			
XY1991S	1-53004678 Plate	XJ, YJ	1991	4.0L
	1-53008259 Disc			
	1-33004041 Pilot / Maindrive			
	1-53005967 Clutch control unit			

© 2003 Projekt 4x4

Clutch

KIT NUMBER	KIT COMPONENTS	VEHICLES	YEAR	ENG. TYP
XY1992F	1-4626213C Plate	XJ, YJ	1992	2.5L
	1-53007584 Disc			
	1-3250005 Pilot / Maindrive			
	1-4638465			
XY1992S	1-4638411C Plate	XJ, YJ	1992	4.0L
	1-53008259 Disc			
	1-53009181 Pilot / Maindrive			
	1-4638464 Clutch control unit			
XY1993F	1-4626213C Plate	XJ, YJ	1993	2.5L
	1-53007584 Disc			
	1-3250005 Pilot / Maindrive			
	1-4728735 Clutch control unit			
XY 1993S	1-4638411C Plate	XJ, YJ, J	1993	4.0L
	1-53008259 Disc			
	1-53009181 Pilot / Maindrive			
	1-4728735 Clutch control unit			
TXY9499F	1-4626213C Plate	XJ, YJ, TJ	1994-99	2.5L
	1-53007584 Disc			
	1-53008342 Clutch bearing			
	1-3250005 Pilot / Maindrive			
	1-53006388 Fork			
TXYZ9499S	1-4638411C Plate	XJ, YJ, ZJ, TJ	1994-99	4.0L
	1-53008259 Disc			
	1-53008342 Clutch bearing			
	1-53009181 Pilot / Maindrive			
	1-53006388 Fork			

© 2003 Projekt 4x4

Clutch

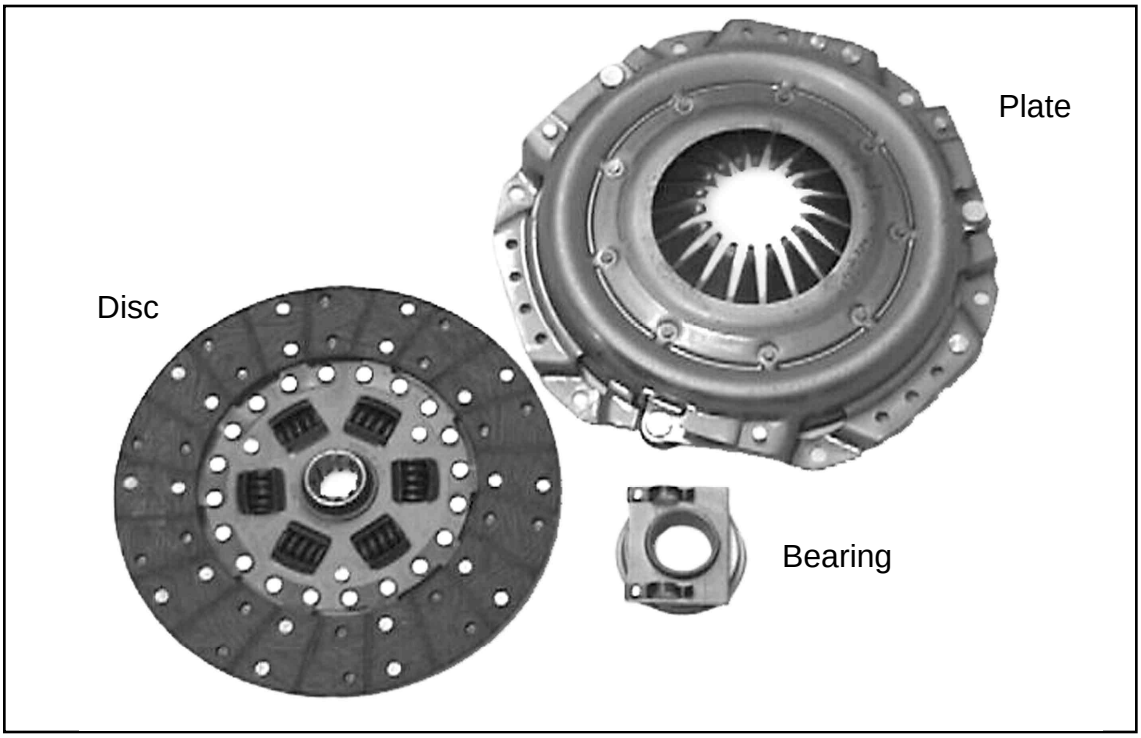

CLUTCH KITS :

KEY:OD=Outer diameter

KIT NUMBER	KIT COMPONENTS	VEHICLES	YEARS	ENG. TYPE
3184909K	1-3184908 Plate	CJ	00-81	5.0L
	1-5357436 Disc			
	1-3190517 Bearing			
5357437K	1-5357436 Plate	CJ, SJ	00-81	4.2L -11″OD
	1-3184867 Disc			
	1-5361614 Bearing			
5360174K	1-3184908 Plate	CJ, SJ	00-81	4.2L-10.5″OD
	1-3240278 Disc			
	1-5361614 Bearing			
3240278K	1-3240277 Plate	CJ, SJ	82-86	4.2L
	1-3240278 Disc			
	1-3241263 Bearing			
8132577K	1-8132576 Plate	CJ	81-83	GM 2.5L
	1-8132577 Disc			
	1-5361614 Bearing			

© 2003 Projekt 4x4

CLUTCH KITS

KEY:OD=Outer diameter

KIT NUMBER	KIT COMPONENTS	VEHICLES	YEARS	ENG. TYPE
3184867K	1-5357436 Plate	SJ	81-86	5.9L
	1-3184867 Disc			
	1-3190517 Bearing			
53001420K	1-53002711 Plate	CJ	85-86	AMC 2.5L
	1-53004538 Disc			
	1-53000175 Bearing			
83500806K	1-83500804 Plate	XJ, MJ	86	V-6
	1-53008166 Disc			
	1-53001092 Bearing			
53004116K	1-53004678 Plate	YJ	87-89	4.2L
	1-53004679 Disc			
	1-83503383 Clutch control unit			
53004538K	1-53003006 Plate	YJ	87-90	2.5L
	1-53004538 Disc			
	1-83503384 Clutch control unit			
4626213	1-4626213C Plate	YJ, XJ, MJ	91-96	2.5L-9″ OD
	1-53007584 Disc			
4637112	1-J0723977 Plate	XJ	91-96	2.1L Diesel
	1-J0729376 Disc			
52104098	1-4638411C Plate	XJ, YJ, ZJ	92-99	4.0L
	1-53008259 Disc			
52107570	1-53003006 Plate	TJ	97-99	2.5L
	1-52107571 Disc			

© 2003 Projekt 4x4

CLUTCH CONTROL UNIT:

REPLACES PART#	MODEL	YEAR	ENG. TYPE	TRANS.
83503383	MJ, XJ, YJ	1987-89	4.0L, 4.2L	BA10/5
83503384	MJ, XJ, YJ	1987-89	2.5L	AX4/5
5252137	MJ, XJ, YJ	1989-90	4.0L, 4.2L	AX/15
53006068	MJ, XJ, YJ	1991	2.5L	AX4/5
53005967	MJ, XJ, YJ	1991	4.0L	AX/15
4638465	MJ, XJ, YJ	1992	2.5L	AX4/5
4638464	MJ, XJ, YJ	1992	4.0L	AX/15
4728735	XJ, YJ	1993	2.5L, 4.0L	AX4/5, AX/15

© 2003 Projekt 4x4

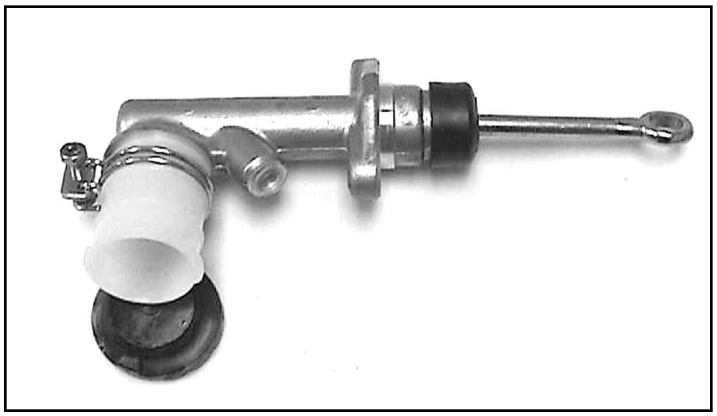

CLUTCH MASTER CYLINDER:

REPLACES PART#	MODEL	YEAR	DESCRIPTION
5359822	CJ	1981-86	w/ 2.5L
53004466	YJ	1987-90	w/ 4.2L
4636865	YJ	1991-93	
52107642R	YJ	1994-95	cylinder only
52000068	XJ	1984-85	
53001163	XJ	1986	w/ 2.8L
53004467	XJ	1987-90	
4636864	XJ	1991-93	

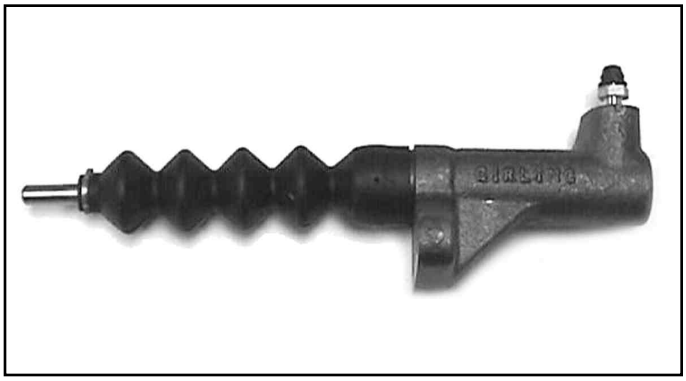

CLUTCH SLAVE CYLINDER:

REPLACES PART#	MODEL	YEAR	DESCRIPTION
5361648	CJ	1976-81	w/ 4.2L
3241869	CJ	1982-86	w/ 4.2L
3236779	CJ	1976-81	w/ GM 2.5L or Diesel
3241867	CJ	1982-83	w/ GM 2.5L
52000070	CJ	1983-86	w/ AMC 2.5L
52000070	XJ	1984-86	w/ 2.5L or 2.8L
53001324	XJ	1984-96	w/ diesel
52107640S	XJ, YJ	1994-97	cylinder only
5210724S	ZJ	1993-99	cylinder only
52107640S	TJ	1997-00	cylinder on YJ

© 2003 OFFROADPROJEKT

CLUTCH LINKAGE:

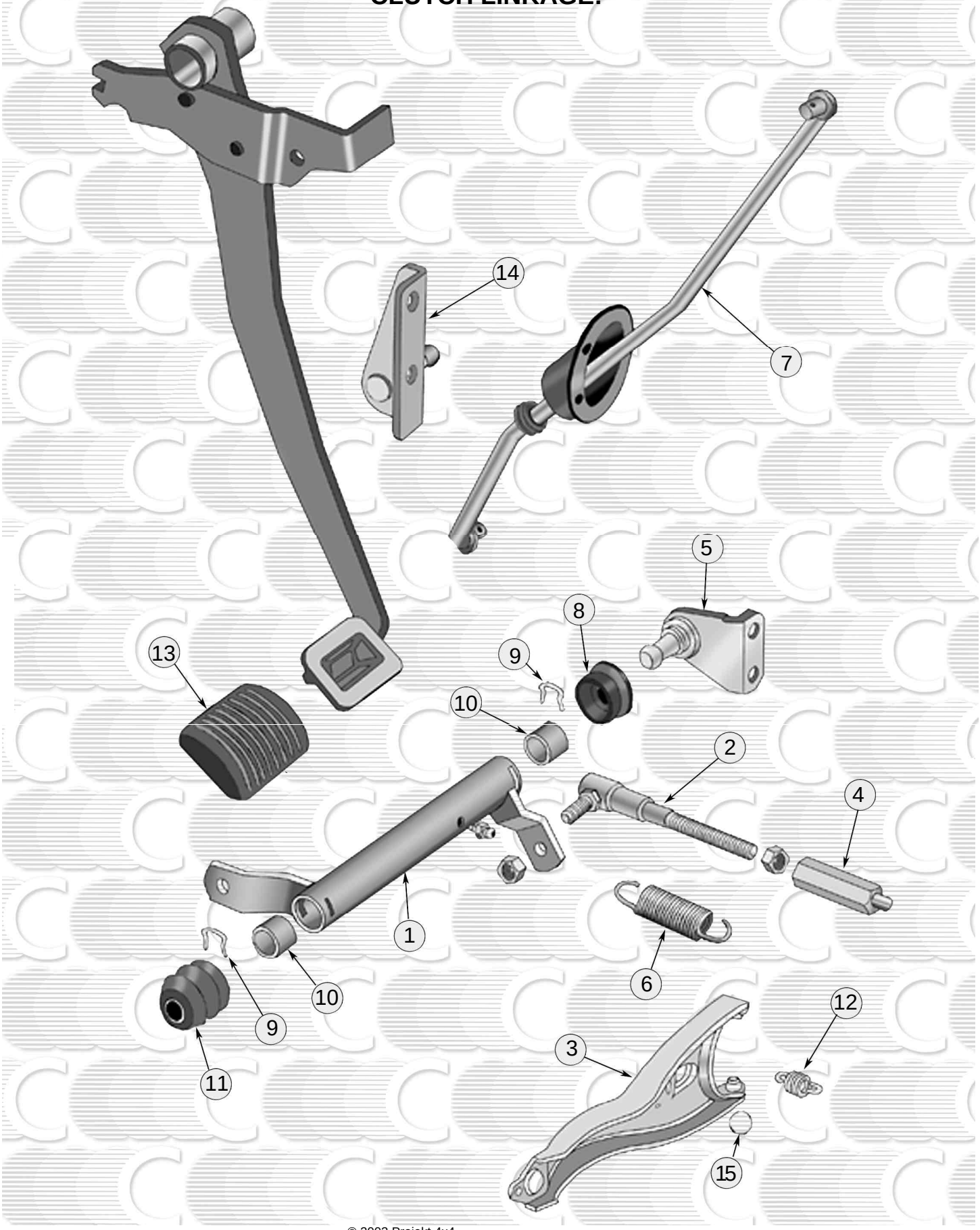

© 2003 Projekt 4x4

CLUTCH LINKAGE:

NO.	DESCRIPTION	REPLACES PART#
1.	Bell crank (1976-81)	5360104
	Bell crank (1982-86)	5364621
2.	Rod, clutch fork	5359943
3.	Fork, clutch (1976-79)	3224122
	Fork, clutch (1980-86)	5361620
4.	Adjuster	5359735
5.	Support	5360112
6.	Spring	5351252
	Rod, clutch bell crank (1982-86)	5364620
8.	Boot	3167049
9.	Retainer	3169769
10.	Bushing	3167067
11.	Boot	3170937
12.	Spring	3222799
13.	Pad, clutch pedal (1976-81)	948758
	Pad, clutch pedal (1982-86)	5363508
14.	Bracket	5355339
15.	Ball	169162

© 2003 Projekt 4x4

Cooling

Cooling 6-1

XJ 6-3
ZJ 6-3
YJ 6-4
TJ 6-4
CJ 6-5
SJ 6-5

Back

© 2003 Projekt 4x4

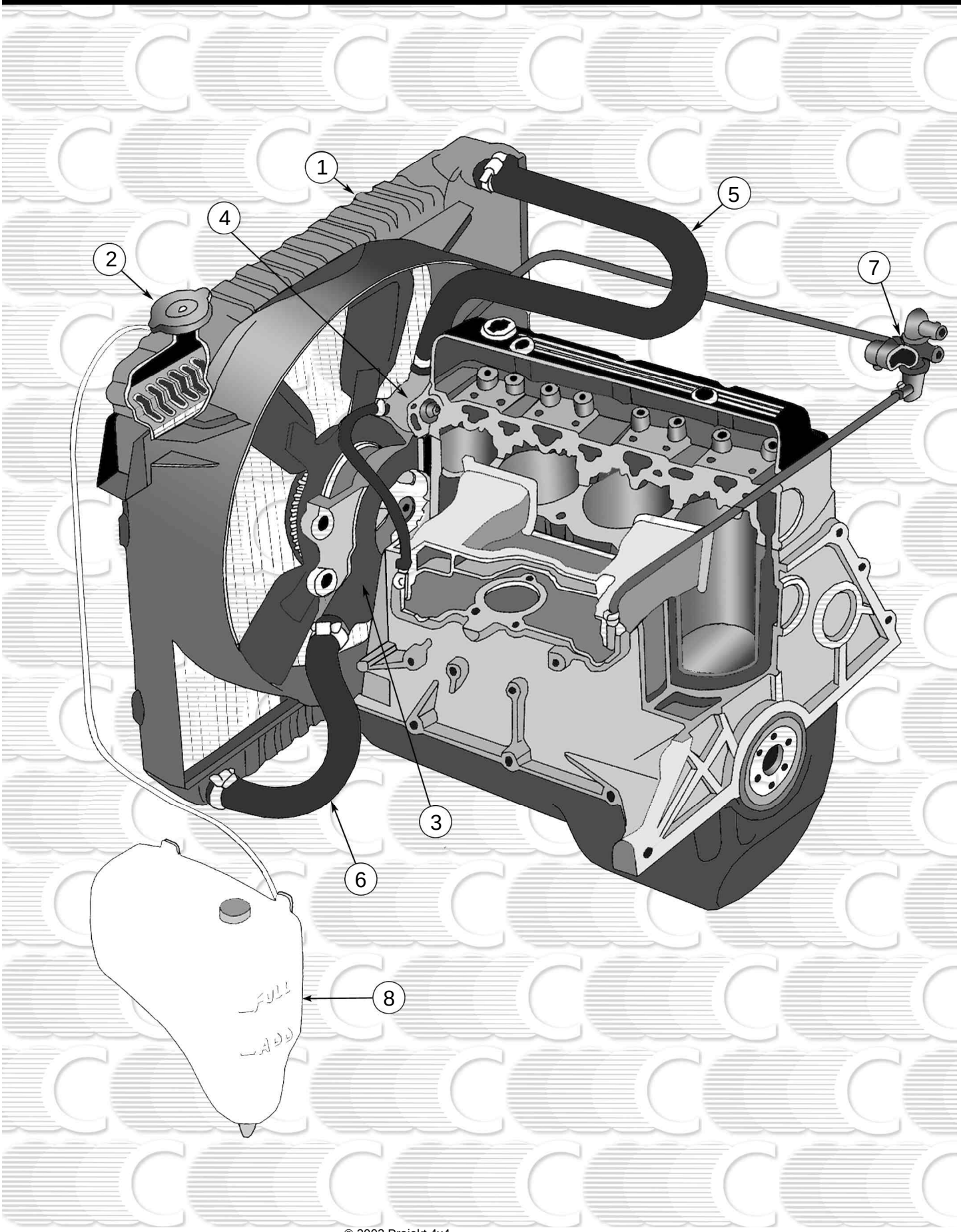

© 2003 Projekt 4x4

XJ:

NO.	DESCRIPTION	YEARS	ENGINE	REPLACES PART#
1.	Radiator w/ H.D. Cooling	84-86	2.5L, 2.8L	53000521
	Radiator	87-90	2.5L	52003370
	Radiator w/ A/C	87-90	4.0L	52003696
	Radiator	87-90	4.0L	52003157 (Stamped 3156,7,8,9)
	Rad w/ H.D. Cooling & Auto	87-90	4.0L	52003933
	Radiator	91-98	4.0L	52028133
2.	Cap, Radiator	84-90	2.5L	3239375
		84-86	2.8L,	3239375
	Cap, Radiator	91-00	2.5L, 4.0L	3781830
3.	Water Pump	84-86	2.8L	83500807
	Water Pump (w/o serp.)	84-86	2.5L	8134320
	Water Pump (w/ serp)	84-86	2.5L	8134321
	Water Pump	87-90	2.5L	83502957
	Water Pump	87-90	4.0L	83503407
	Water Pump	91-98	2.5L	4626054
	Water Pump	91-98	4.0L	4626215
4.	Thermostat	84-86	2.8L	83500813
	Thermostat	84-96	2.5L, 4.0L	83501426
	Thermostat (Europe)	87-96	2.5L	83504378
5.	Upper (Inlet) Hose w/ A/C	84-86	2.8L	53000013
	Upper (Inlet) Hose	84-86	2.8L	53000509
	Upper (Inlet) Hose	84-86	2.5L	53000471
	Upper (Inlet) Hose w/ A/C	87-90	2.5L	52003791
	Upper (Inlet) Hose	87-96	2.5L	52003789
	Upper (Inlet) Hose	87-93	4.0L	52003946
	Upper (Inlet) Hose	94-96	4.0L	52028419
	Upper (Inlet) Hose RHD	91-98	2.5L	52006499
6.	Lower (Outlet) Hose	84-86	2.8L	53000014
	Lower (Outlet) Hose	87-96	2.5L	52003790
	Lower (Outlet) Hose	87-90	4.0L	52003945
	Lower (Outlet) Hose	91-96	4.0L	52006301
7.	Water Valve	91-96	2.5L, 4.0L	56005900
8.	Coolant Bottle	87-96	4.0L	J0758977
	Coolant Bottle	87-90	2.5L	52003130

ZJ:

NO.	DESCRIPTION	ENGINE	REPLACES PART#
1.	Radiator w/ H.D. Cooling		
	Radiator w/ Auto Trans.	4.0L	4734103
	Radiator	5.2L, 5.9L	4734104
2.	Cap, Radiator	4.0L	3781830
	Cap, Radiator	5.2L, 5.9L	52027793

© 2003 Projekt 4x4

3.	Water Pump	4.0L	4626054
	Water Pump	5.2L, 5.9L	53020280
4.	Thermostat	4.0L	83501426
	Thermostat	5.2L, 5.9L	4494469
5.	Upper (Inlet) Hose	4.0L	52028263
	Upper (Inlet) Hose	5.2L, 5.9L	52029272
6.	Lower (Outlet) Hose	4.0L	52028262
	Lower (Outlet) Hose	5.2L, 5.9L	52028226

YT / TJ:

NO.	DESCRIPTION	YEARS	ENGINE	REPLACES PART#
	Radiator w/ H.D. Cooling			
1.	Radiator	87-91	2.5L, 4.2L	52006124
	Radiator w/ Man.	92-95	2.5L, 4.0L	52028112
	Radiator w/ Man. (TJ)	97-99	4.0L	52080183
2.	Cap, Radiator	87-93	ALL	3239375
	Cap, Radiator	94-95	2.5L, 4.0L	3781830
	Cap, Radiator (TJ)	97-99	2.5L, 4.0L	52027793
3.	Water Pump	87-90	2.5L, 4.2L	83502957
	Water Pump	91-95	2.5L, 4.0L	4626054
	Water Pump (TJ)	97-99	2.5L, 4.0L	4626054
4.	Thermostat	87-95	ALL	83501426
5.	Upper (Inlet) Hose	87-95	2.5L	52040235
	Upper (Inlet) Hose	87-90	4.2L	52040290
	Upper (Inlet) Hose	91-95	4.0L	52005794
6.	Lower (Outlet) Hose	87-95	2.5L	52040236
	Lower (Outlet) Hose	87-90	4.2L	52040289
	Lower (Outlet) Hose	91-95	4.0L	52005918
	Lower (Outlet) Hose (TJ)	97-99	4.0L	52028265

© 2003 Projekt 4x4

CJ:

NO.	DESCRIPTION	YEARS	ENGINE	REPLACES PART#
	Radiator w/ H.D. Cooling			
1.	Rad w/ H.D. Cooling & Man.	74-80	4.2L, 5.2L	5361574
	Radiator w/ H.D. Cooling	81-86	4.2L	5362492
	Radiator w/ Isu u Diesel or V8 conversion			5361455
2.	Cap, Radiator (w/o Coolant Recovery)	ALL	ALL	5352954
	Cap, Radiator (w/ Coolant Recovery)	ALL	ALL	5358177
3.	Water Pump	81-83	GM 2.5L	8136613
	Water Pump (w/o serp.)	81-86	2.5L, 4.2L	8134320
	Water Pump (w/ serp.)	81-86	2.5L, 4.2L	8134321
4.	Thermostat	74-81	5.2L	8127383
	Thermostat	81-86	2.5L, 4.2L	83501426
5.	Upper (Inlet) Hose	81-83	GM 2.5L	5360950
	Upper (Inlet) Hose	74-81	5.2L	999632
	Upper (Inlet) Hose	76-86	4.2L	5362697
6.	Lower (Outlet) Hose	81-83	GM 2.5L	5360951
	Lower (Outlet) Hose	74-81	5.2L	5354528
	Lower (Outlet) Hose (w/ H.D. Cooling)	76-86	4.2L	5362162
	Lower (Outlet) Hose (w/o H.D. Cooling)	76-86	4.2L	5354380

SJ:

NO.	DESCRIPTION	YEARS	ENGINE	REPLACES PART#
	Radiator w/ H.D. Cooling			
1.	Radiator w/ H.D. Cooling	81-90	4.2L	5361576
	Radiator	81-86	5.9L	5361575
	Radiator w/ H.D. Cooling	87-91	5.9L	52003751
2.	Cap, Radiator (w/o H.D. Cooling)	81-90	ALL	5352954
	Cap, Radiator (w/ H.D. Cooling)	81-90	ALL	5358177
3.	Water Pump (w/o serp.)	81-90	4.2L	8134320
	Water pump (w/ serp.)	81-90	4.2L	8134321
	Water Pump	81-90	5.9L	3234427
4.	Thermostat	81-90	ALL	8127383
5.	Upper (Inlet) Hose	81-90	4.2L	5362698
	Upper (Inlet) Hose	81-88	5.9L	83503499
	Upper (Inlet) Hose	89-90	5.9L	83505532
6.	Lower (Outlet) Hose	81-90	4.2L	5354405
	Lower (Outlet) Hose	81-90	5.9L	5354528

© 2003 Projekt 4x4

Electrical

Electrical 7-1

Starter 7-2
Distributor 7-3
Alternator 7-4
Alternator Stator 7-4
Ignition Module 7-5
Ignition Coil 7-6
Oxygen Sensor 7-7
Temperature Sensor 7-8
Throttle Position Sensor 7-8
Sensor (Miscellaneous) 7-8
Oil Pressure Sending Unit 7-9
Coolant Temperature Sending Unit 7-10
Headlamp and Dimmer Switch 7-10
Wiper Directional and Ignition Switch 7-11
Miscellaneous 7-12

Back

© 2003 Projekt 4x4

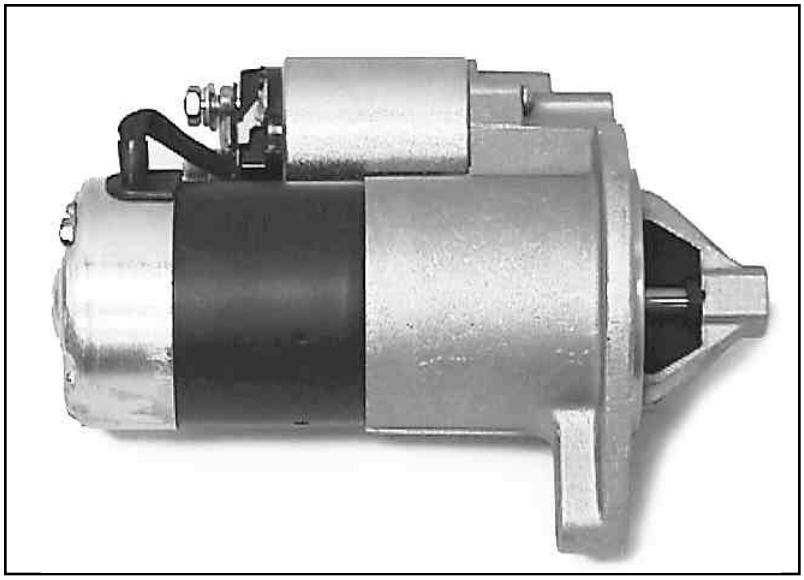

STARTER:

REPLACES PART #	YEAR	ENGINE	DESCRIPTION
3242283	1983-90	2.5L	starter w/ carb.
53002124	1984-86	2.8L	starter
5752791	1981-87	4.2L, 5.2L, 5.9L	starter
8120193	1981-87	4.2L, 5.2L, 5.9L	starter drive (NP)
8128434	1981-87	4.2L, 5.2L, 5.9L	starter brush (NP)
8128433	1981-87	4.2L, 5.2L, 5.9L	starter brush Holder (NP)
33002709	1987-93	4.0L	starter
	1988-91	4.2L, 5.9L	starter
83503480	1987-90	2.5L	starter w/ injection
53002125	1991-93	2.5L	starter w/ injection
4796981	1994-00	2.5L	starter w/ injection
56027317	1994-96	4.0L	starter
56041014	1997-00	4.0L	starter
83503662	1987-00	4.0L, 4.2L, 5.9L	starter drive (NP)
83503670	1987-00	4.0L, 4.2L, 5.9L	starter brush (NP)
83503671	1987-00	4.0L, 4.2L, 5.9L	starter brush Holder (NP)

© 2003 Projekt 4x4

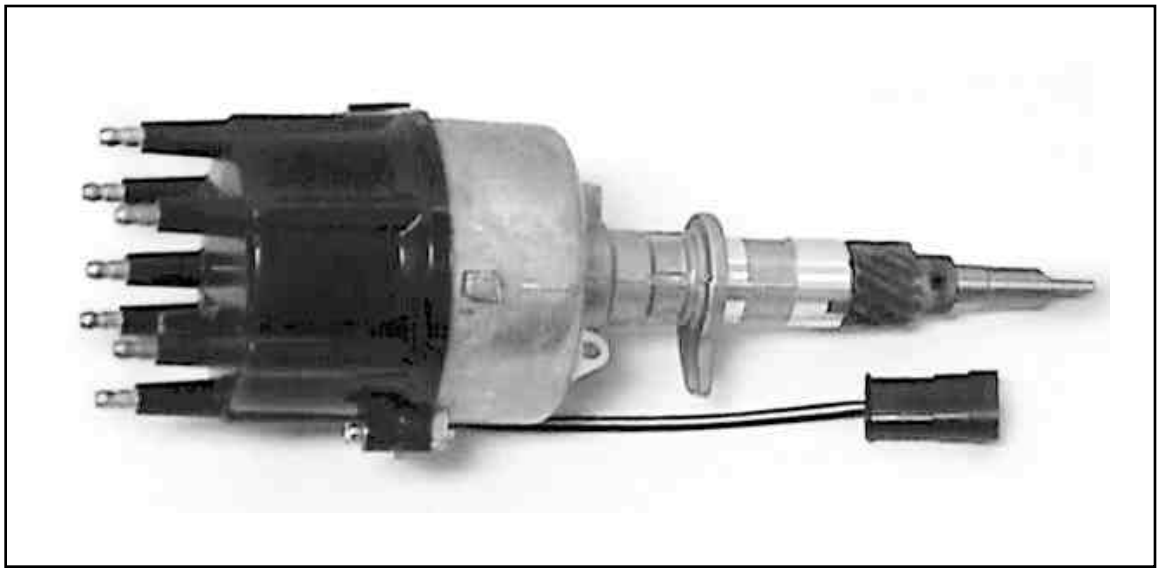

DISTRIBUTOR:

REPLACES PART #	YEAR	ENGINE	DESCRIPTION
8130961	1980-81	2.5L GM	tagged 110560
3243066R	1983-86	2.5L AMC	
3231915	1979	4.2L	
3242410	1981-86	4.2L	
33004655	1987-90	4.2L	
3237198	1981-86	5.2L	
3230443	1981-86	5.9L	
3233174	1987-90	5.9L	
53006450	1991	5.9L	
33004654	1987-93	2.5L	w/ carb
53002107	1986-90	2.5L	tagged 53002107
33004461	1987-92	2.5L	w/ EFI
53006151	1991-93	2.5L	w/ MPI
56027027	1994-96	2.5L	
53006150	1991-93	4.0L	
4723067	1994	4.0L	
56027028	1994-98	4.0L	after Nov. 1994
3231391	1981-86	4.2L	distributor gear
8133652	1983-90	2.5L	distributor gear
	1987-90	4.2L	distributor gear
3208615	1981-91	5.9L	distributor gear
83506515	1991-96	2.5L	distributor gear
83504635	1987-00	4.0L	distributor gear
	1997-00	2.5L	distributor gear

© 2003 Projekt 4x4

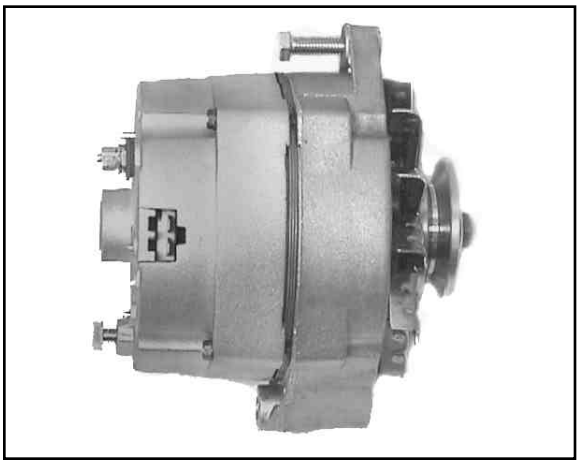

ALTERNATOR:

REPLACES PART #	YEAR	ENGINE	DESCRIPTION
8134663	1981-91	CJ, SJ	w/ 42 amp
8134664	1981-91	CJ, SJ	w/ 56-78 amp
53003802	1987-90	2.5L	61 amp tagged 1101175
53004264	1987-90	2.5L	61 amp tagged 1101171
53003803	1987-90	2.5L	74 amp tagged 1101176
53004265	1987-90	2.5L	74 amp tagged 1101172
JR775127	1987-90	4.0L	60 amp tagged 1101168
53002898	1987-90	4.0L	85 amp tagged 1101170
53002897	1987-90	4.0L	100 amp tagged 1101167
53008647	1993-94	5.2L	ZJ
56005685	1991-96	2.5L, 4.0L	XJ w/ 90 amp
	1993-98	4.0L	ZJ w/ 90 amp
	1997-98	2.5L, 4.0L	TJ w/ 90 amp
53009744	1991-93	2.5L, 4.0L	Europe w/ 90 amp
56026811	1994-96	2.5L, 4.0L	Europe w/ 117 amp
56026936	1991-98	2.5L, 4.0L	RHD

ALTERNATOR STATORS:

REPLACES PART #	YEAR	ENGINE	DESCRIPTION
8125196	1981-86		SJ tagged 1100129, 1103155, 1103196
8134648	1981-90		CJ tagged 1105081, 2
	1984-90	2.5L, 2.8L, 4.2L	XJ, YJ tagged 1105044, 1105047, 1105058
8134649	1981-86		CJ, SJ tagged 1105083, 4
	1984-90	2.5L, 2.8L, 4.2L	XJ, YJ tagged 1105045,6,8,9
83501991	1984-90	2.1L Diesel	XJ
8128900	1981-91	5.9L	SJ
83500409	1983-90	2.5L	w/ carb.
	1994-96	2.5L	

© 2003 Projekt 4x4

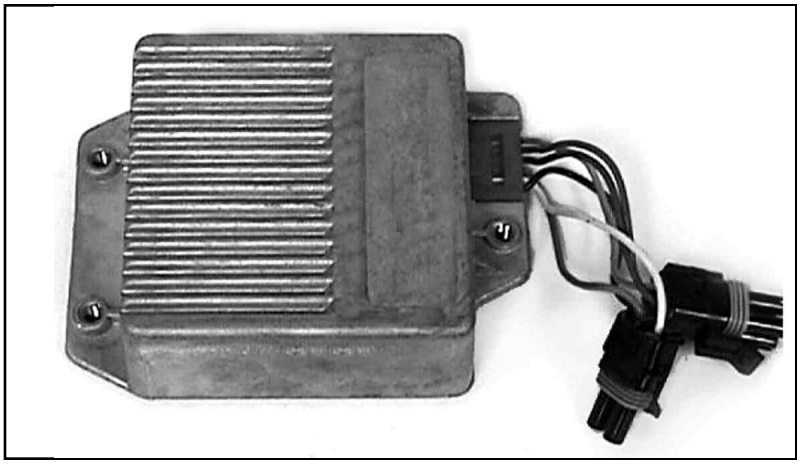

IGNITION MODULE:

REPLACES PART #	MODEL	YEAR	ENGINE	DESCRIPTION
3230451	CJ	1981-86	2.5L, 4.2L	
	SJ	1981-86	4.2L, 5.9L	
	XJ	1984-85	2.5L	w/ carb.
	XJ	1987-90	2.5L	w/ carb.
33004065	XJ	1987		
	YJ	1987		
53005079	XJ	1988-90		
	YJ	1988-90		
	SJ	1988-91		
33002299	XJ	1986	2.5L	w/ carb.
	XJ	1987-90	2.5L, 4.0L	w/ EFI
	YJ	1987-90	2.5L	w/ EFI

© 2003 Projekt 4x4

IGNITION COIL:

REPLACES PART #	MODEL	YEAR	ENGINE	DESCRIPTION
83501871	XJ	1985-86	2.8L	
T1031135	XJ	1987-90	2.5L, 4.0L	w/ EFI
33004522	XJ, YJ	1987-90	2.5L, 4.2L,	w/ carb.
	SJ	1987-91	4.2L, 5.9L	w/ carb.
5252577	XJ, YJ	1991-93	2.5L, 4.0L	w/ EFI
5234210	XJ, YJ, ZJ	1994-96	2.5L, 4.0L, 5.2L	w/ EFI
4797293	XJ, YJ, ZJ, TJ	1997-00	2.5L, 4.0L, 5.2L, 5.9L	w/ EFI

© 2003 Projekt 4x4

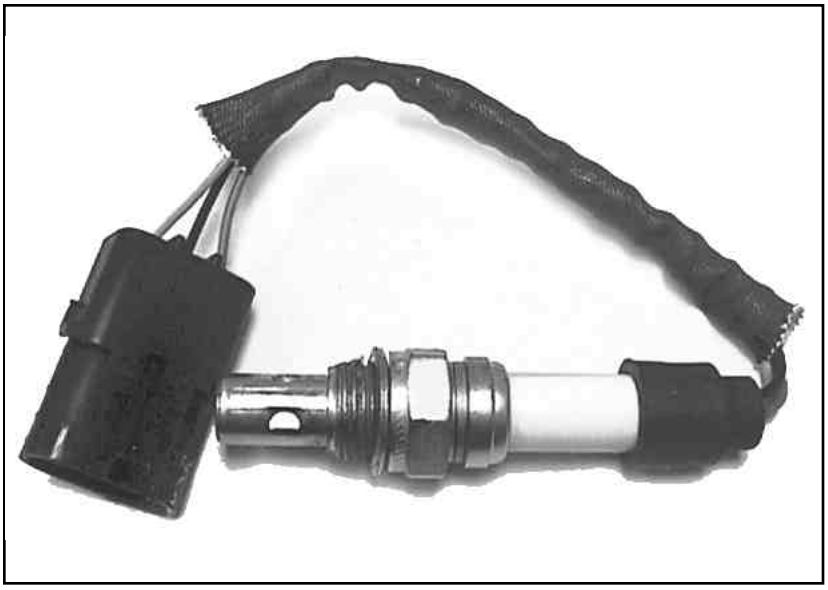

OXYGEN SENSOR:

REPLACES PART #	MODEL	YEAR	ENGINE	DESCRIPTION
3240083	CJ	1981-82	2.5L GM	
33002455	CJ	1983-86	2.5L AMC	
	CJ	1981-86	4.2L	
	XJ	1985	2.5L	
	SJ	1985	4.2L	
3238765	SJ	1981-83	4.2L	
33000598	XJ	1984	2.5L	
	SJ	1984	4.2L	
53002106	XJ	1986	2.5L	
	XJ, YJ	1987	2.5L	
53000886	XJ	1984-86	2.8L	
53004245	XJ	1987-90	4.0L	
33004243	YJ, SJ	1987-90	4.2L	
53007638	XJ, YJ	1991-96	2.5L	w/ 4 hole Zirconium
56028200	XJ, YJ	1994-96	2.5L	w/ 12" pigtail
56041005	XJ	1994-96		after catalyst
56041212	XJ	1998	4.0L	w/ 18" pigtail
56041213	XJ	1998	2.5L	w/ 12" pigtail
56027902	ZJ	1993-95	4.0L	w/ 22" pigtail
56041006	ZJ	1994-96		after catalyst
56028603	ZJ	1996-98	4.0L	w/ 22" pigtail
56028301	ZJ	1993-95	5.2L	
56027917	ZJ	1996-98	5.2L, 5.9L	w/ 12" pigtail
56041056	ZJ	1997-98		after catalyst

© 2003 Projekt 4x4

TEMPERATURE SENSOR:

REPLACES PART#	MODEL	YEAR	ENGINE	DESCRIPTION
33002382	XJ	1984-96	2.5L	air temp. sensor (w/ EFI)
	XJ	1987-90	2.5L, 4.0L	on intake manifold
33002383	XJ	1984-90	2.5L, 4.0L	coolant temp. sensor
33004280	XJ, YJ	1991-96	2.5L, 4.0L	air temp. sensor
	ZJ	1994-95	5.2L	on intake manifold
33001979	CJ	1983-86	2.5L AMC	coolant temp. sensor
	XJ	1984-86	2.5L	
	YJ, SJ	1987-90	4.2L	
33004281	XJ, YJ, ZJ	1991-96	ALL	coolant temp. sensor

THROTTLE POSITION SENSOR:

REPLACES PART#	MODEL	YEAR	ENGINE	DESCRIPTION
33000169	XJ	1986-90	2.5L	w/ EFI & man. trans.
	YJ	1987-90	2.5L	w/ EFI
4761871AB	XJ, YJ, ZJ	1991-96	2.5L, 4.0L	

SENSOR (MISC.):

REPLACES PART#	MODEL	YEAR	ENGINE	DESCRIPTION
3242321	CJ	1983-86	2.5L AMC	early fuel evap.
	XJ	1984-86	2.5L	w/ carb.
	YJ, SJ	1987-90	4.2L	
	XJ, YJ	1987-96	2.5L	w/ carb.
83502327	XJ	1985-86	2.8L	early fuel evap.
T0739789	XJ, YJ	1987-90	2.5L	engine speed sensor
	XJ	1987	4.0L	
33004761	XJ	1988-90	4.0L	engine speed sensor
83503722	XJ	1987-97	auto trans.	speed sensor w/ AW4

© 2003 Projekt 4x4

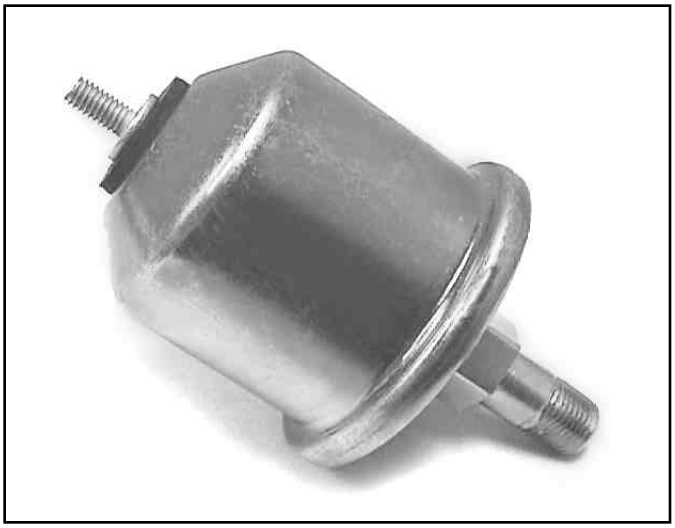

OIL PRESSURE SENDING UNIT / SWITCH:

REPLACES PART#	MODEL	YEAR	ENGINE	DESCRIPTION
3241716	CJ	1981-86	2.5L GM	sending unit
3212004	CJ	1981-86	ALL	sending unit
	SJ	1981-85		
5751951	CJ	1981-86		sending unit w/ diesel
5758695	CJ	1981-86		switch w/ 2 Terminals
	SJ	1981-91		switch w/ 2 Terminals
	YJ	1987-93		
	XJ	1987-90		export
3231347	CJ, SJ	1981		switch w/ 3 Terminals
53000834	XJ	1984-85		sending unit
	SJ	1986		
53004550	XJ	1986		sending unit
3142826	XJ	1984-91		switch w/o gauge package
33002472	XJ	1984-90		sending unit w/ diesel
53005218	YJ	1981-91		sending unit
	XJ	1987-90		
56026781	XJ	1991-96		sending unit w/ Europe
56026782	XJ, SJ	1991		sending unit
56026719	XJ	1992-96		switch
56026779	YJ	1991-95		sending unit
	XJ	1992-96		sending unit
	ZJ	1993-95		sending unit

© 2003 Projekt 4x4

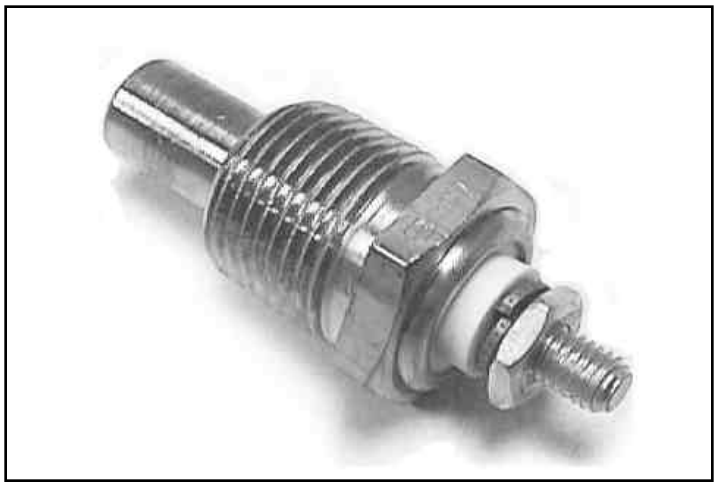

COOLANT TEMPERATURE SENDING UNIT:

REPLACES PART #	MODEL	YEAR	ENGINE	DESCRIPTION
5751811	CJ	1981-86	2.5L GM	
5752305	CJ	1981-86	Isuzu Diesel	
3177594	CJ	1981-86		
	SJ	1981-85		
3242662	XJ	1984-85	2.5L	w/ gauge package
	SJ	1986		
53004981	XJ	1986	2.5L	w/ gauge package
3230408	XJ	1984-91	2.5L	w/o gauge package
53005056	YJ, SJ	1987-91		
	XJ	1987-90		w/ coolant temp. gauge
53005309	XJ	1987-90		1991 w/ gauge package
56026710	XJ	1992-96		switch w/ warning lamp
	YJ, ZJ	1994-96		switch w/ warning lamp

HEADLAMP & DIMMER SWITCH:

REPLACES PART #	MODEL	YEAR	DESCRIPTION
5751098	CJ	1981-86	headlamp (in-dash)
	SJ	1981-85	
56001197	XJ	1984-91	headlamp (in-dash)
4565320	XJ	1992-96	headlamp (in-dash)
56003119	YJ	1987-95	headlamp (in-dash)
5461816	SJ	1981-86	dimmer
8134498	SJ	1982-86	dimmer w/ RHD
	XJ, YJ	1989	dimmer
3239703	XJ, YJ	1984-88	dimmer
56003406	YJ	1990-95	dimmer
	XJ	1991-96	dimmer

© 2003 Projekt 4x4

WIPER, DIRECTIONAL & IGNITION SWITCH:

REPLACES PART#	MODEL	YEAR	DESCRIPTION
5460089	CJ	1981-82	wiper w/o intermittent
5758687	CJ	1983-86	wiper w/o intermittent
	SJ	1981-86	wiper w/o intermittent
56000031	XJ	1984-93	wiper w/o intermittent
	YJ	1987-95	wiper w/o intermittent w/o tilt
56000431	XJ	1984-94	wiper w/o intermittent w/ tilt
56000032	XJ	1984-93	wiper w/ intermittent
	YJ	1987-93	wiper w/ intermittent
56007298	XJ, YJ	1994-96	wiper w/ intermittent
3229970	CJ	1981-86	directional w/ column shift
	XJ	1984-93	directional w/ floor shift
	SJ	1981-86	directional w/ both
	YJ	1987-93	directional w/ both
56002011	CJ	1981-86	directional w/ floor shift
	SJ	1987-91	directional w/ column shift and tilt
	YJ	1987-90	directional w/ floor shift w/ tilt
56007255	YJ	1994-95	directional
	XJ	1994	directional
3250575	XJ	1984-94	ignition, floor shift w/ tilt
	SJ	1981-86	ignition, floor shift w/ tilt
	SJ	1987-91	ignition, column shift w/ tilt
	YJ	1987-95	ignition, column shift w/ tilt
	XJ	1991-93	ignition, column w/ tilt
3250576	XJ	1984-94	ignition, floor shift w/o tilt
	SJ	1981-86	ignition, floor shift w/o tilt
	YJ	1987-95	ignition, floor shift w/o tilt
8128889	CJ, SJ	1981-86	ignition, column shift
8128890	CJ, SJ	1981-86	ignition, column shift w/ tilt

© 2003 Projekt 4x4

SWITCHES (MISC.):

REPLACES PART #	MODEL	YEAR	DESCRIPTION
5352620	CJ	1981-86	brake light switch
	SJ	1981-91	brake light switch
3225787	XJ, YJ	1984-90	brake light switch w/ cruise
3215938	XJ, YJ	1984-90	brake light switch w/o cruise
56006247	YJ	1991-95	brake light switch
56006248	XJ	1991-93	brake light switch
56006981	XJ	1994-96	brake light switch
652153	XJ	1984-90	brake warning lamp switch
53009153	XJ	1991-92	brake warning lamp switch
5350061	CJ, SJ	1981-86	back-up light w/ T18
5751207	SJ	1981-91	back-up light w/ man.
		1981-90	back-up light w/ T176,7
3229472		1981-86	back-up light w/ T4,5, SR4
83500629	XJ, YJ, YJ	1984-00	back-up light w/ AX4/5, 15
83503712	XJ, ZJ	1987-96	back-up light w/ AW4
53004522	XJ, YJ	1987-90	back-up light w/ BA10/5
8130829	SJ	1981-91	t/ case switch w/ NPG 208
3211322	CJ	1981-86	t/ case switch w/ Model 300
83502652	SJ	1986-91	t/ case switch w/NPG 228,9
53001101	XJ, YJ, ZJ	1984-96	vacuum switch w/NPG 207, 231,
53000970	XJ, YJ, ZJ	1984-96	power steering switch (High pressure)
4373296	XJ	1994-00	door ajar switch
4687558	ZJ	1993-94	door / courtesy lamp switch
	TJ	1997-00	door / courtesy lamp switch
3237457	CJ, SJ	1981-86	thermal vacuum switch
	YJ	1987-90	w/ carb. / export
	XJ	1984-96	
3211423	CJ, SJ	1981-86	key buzzer w/o tilt
	XJ	1984-94	key buzzer w/o tilt
	YJ	1987-95	key buzzer w/o tilt
3211424	CJ, SJ	1981-86	key buzzer w/ tilt
	XJ	1984-94	key buzzer w/ tilt
	YJ	1987-95	key buzzer w/ tilt

© 2003 Projekt 4x4

Exhaust

Exhaust 8-1

Front Pipe 8-3
Catalytic Converter 8-3
Muffler 8-4
Tail Pipe 8-4
Manifold 8-5

Back

© 2003 Projekt 4x4

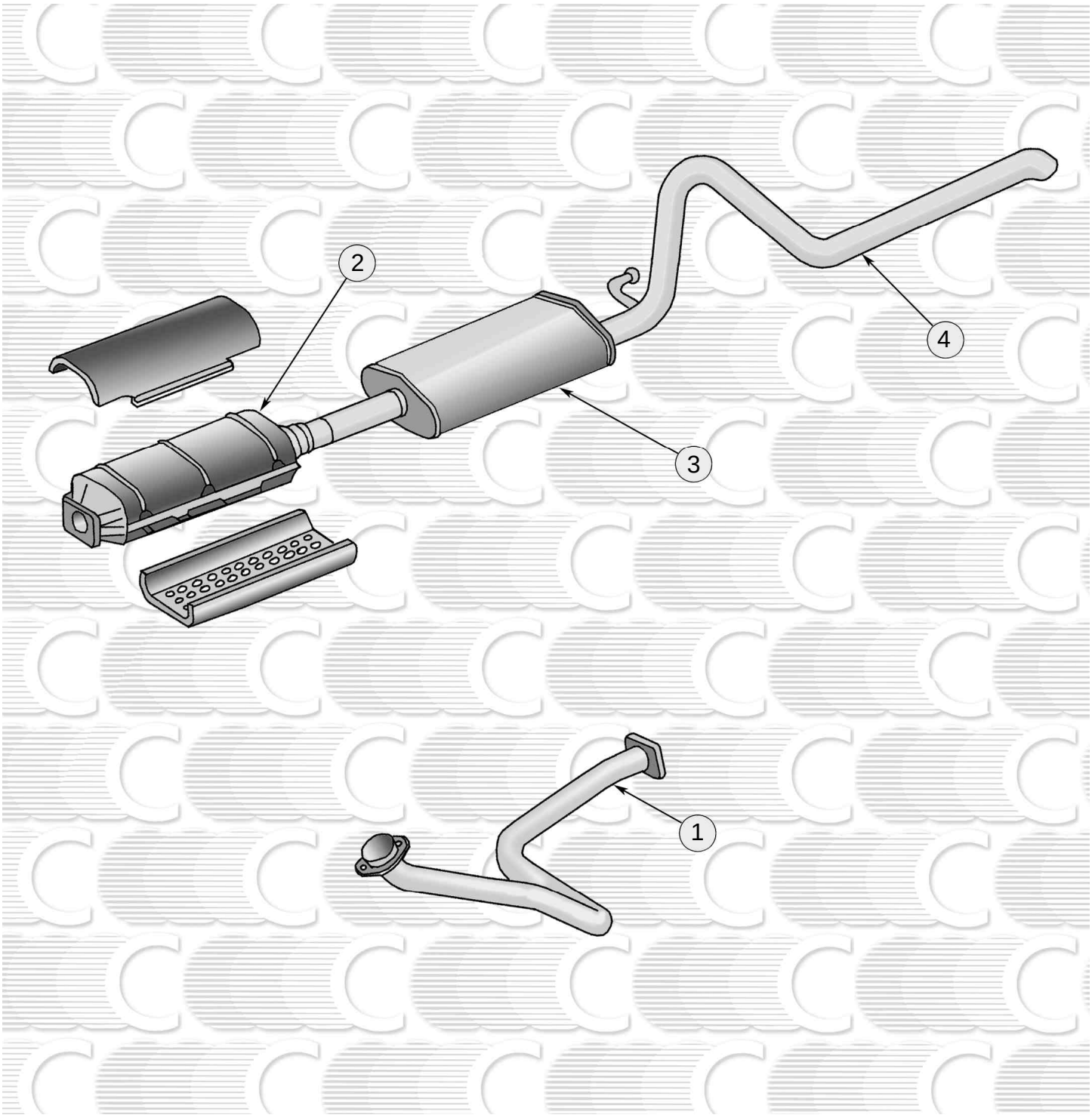

© 2003 Projekt 4x4

Exhaust

(1) FRONT PIPE:

REPLACES PART #	MODEL	YEAR	ENGINE
53001388	XJ	1984-86	
52002989	XJ	1987-90	4.0L
52004996	XJ	1991-92	4.0L
52005187	XJ	1991-92	2.5L
52040278	YJ	1987-90	4.2L
52006626	YJ	1991-92	4.0L
52007397	YJ	1991-92	2.5L
52007051	ZJ	1993-95	5.2L

(2) CATALYTIC CONVERTER:

REPLACES PART #	MODEL	YEAR	ENGINE
5370049	CJ	1981-83	2.5L
	CJ	1981-82	4.2L
	SJ	1981-83	4.2L
5370129	CJ	1984-86	2.5L
	CJ	1983-86	4.2L
5370051	CJ, SJ	1974-83	5.2L, 5.9L
5370145	SJ	1984-91	5.9L
53001627	XJ	1984-85	2.5L
	YJ	1987-90	4.2L
52018104	XJ, YJ	1991-92	4.0L
52018128	XJ, YJ	1993-95	4.0L
52020110	XJ, YJ	1993-96	2.5L
52019600	ZJ	1994-95	5.2L
52019482AC	ZJ	1996-98	5.2L
52019480AD	ZJ	1996-98	4.0L
	XJ	1997-98	4.0L

© 2003 Projekt 4x4

(3) MUFFLER:

REPLACES PART #	MODEL	YEAR	ENGINE	DESCRIPTION
5362725	CJ	1981-86		Muffler only
5361842	J10	1981-87	5.9L	Muffler only
5362540	SJ	1981-86	5.9L	Muffler only
83300066	SJ	1987-91	5.9L	Muffler only
83502978	YJ	1987-92	2.5L	Muffler only
52004422	YJ	1991-92	4.0L	Muffler and tail pipe
83502979	YJ	1987-90	4.2L	Muffler only
52019135	YJ	1993-95	2.5L, 4.0L	Muffler and tail pipe
83502648	XJ	1986	2.8L	Muffler only
83502646	XJ	1986-89	2.5L	Muffler only
52003985	XJ	1987-90	4.0L	Muffler only
52018335	XJ	1991-92	2.5L, 4.0L	Muffler and tail pipe
52019138	XJ	1993-95	2.5L, 4.0L	Muffler and tail pipe
83502649	XJ	1984-90	Diesel	Muffler only
52018162	ZJ	7/16/92-93	4.0L	Muffler and tail pipe
52018163	ZJ	1993	5.2L	Muffler and tail pipe
4864279	ZJ	1994-95	4.0L	Muffler and tail pipe
52021030	ZJ	1994-95	5.2L	Muffler and tail pipe

(4) TAIL PIPE:

REPLACES PART #	MODEL	YEAR	ENGINE	DESCRIPTION
83502645	XJ	1986-89	2.5L	
83502647	XJ	1984-89	Diesel	
83502655	MJ	1986-89		w/ 7 foot bed
83503453	MJ	1987-89		w/ 6 foot bed
83502980	YJ	1987-92		91-92 2.5L only

© 2003 Projekt 4x4

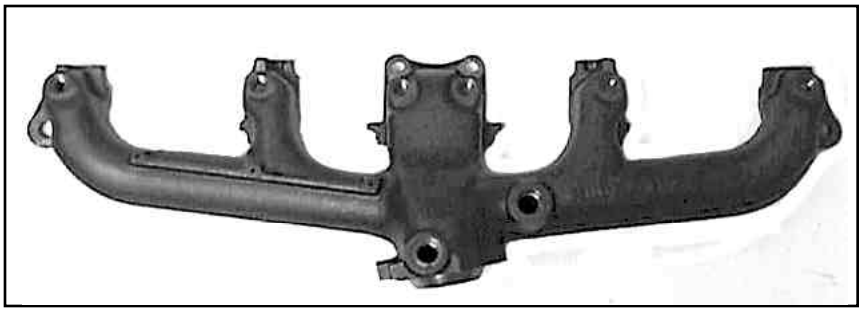

MANIFOLD:

REPLACES PART #	MODEL	ENGINE	YEAR	DESCRIPTION
8124999	CJ, SJ	4.2L	1972-80	also w/ 232 eng.
3237426	CJ, SJ	4.2L	1981-86	
3237427	YJ, SJ	4.2L	1987-91	
8121274	CJ, SJ	5.2L, 5.9L	1974-91	right side (NP)
8122442	CJ, SJ	5.2L, 5.9L	1974-91	left side (NP)

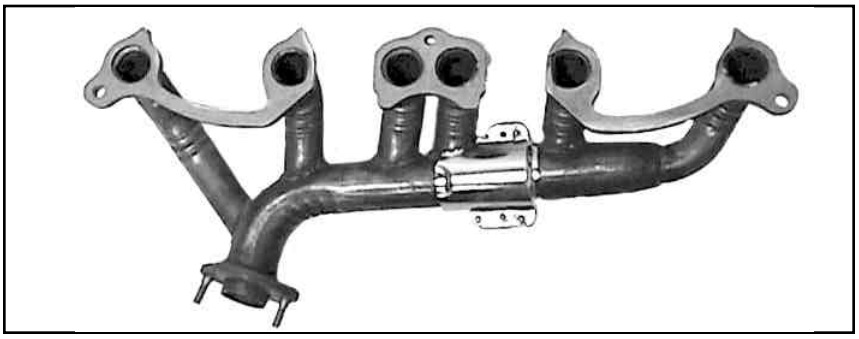

MANIFOLD

REPLACES PART #	MODEL	ENGINE	YEAR	DESCRIPTION
53006244	XJ, MJ	4.0L	1987-90	
33007072	XJ, YJ, ZJ	4.0L	1991-98	

© 2003 Projekt 4x4

Fuel

Fuel 9-1

Injectors 9-2
Fuel Tank 9-2
Fuel Tank Components 9-3
Sending Unit 9-3
Fuel Pump 9-4
Fuel Filter 9-4
Air Filter 9-5
Accelerator Cable 9-5

Back

© 2003 Projekt 4x4

Fuel

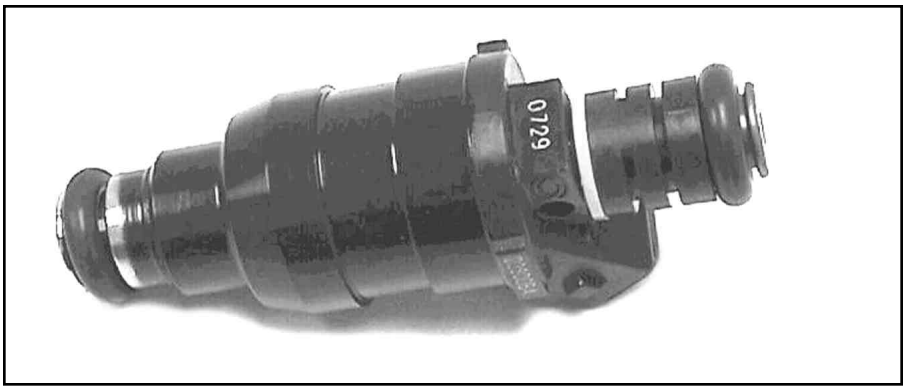

FUEL INJECTORS:

REPLACES PART #	MODEL	YEAR	ENGINE
83504851	XJ, YJ	1987-90	2.5L
53003956	XJ	1987-90	4.0L
53007232	XJ, YJ	1991-95	2.5L
33007127	XJ, YJ	1991-93	4.0L
53030343	XJ, YJ	1994-95	4.0L
	ZJ	1993-95	4.0L
53007809	ZJ	1993-94	5.2L
53030262	ZJ	1995	5.2L

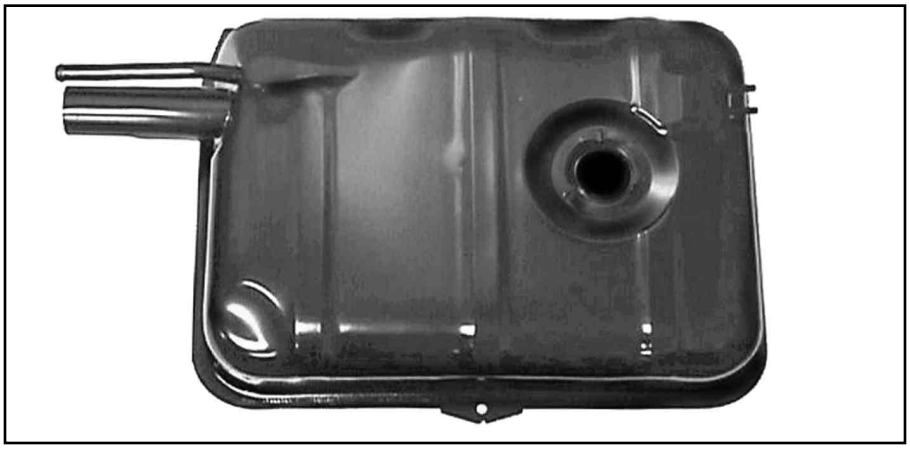

FUEL TANKS:

REPLACES PART #	MODEL	YEAR	ENGINE	DESCRIPTION
640685	CJ2A, 3A	1946-53	L-134	located under seat
912008	CJ3B, 5, 6	1953-71	F-134	located under seat
5355314	CJ	1970-76	ALL	15 gallon / rear mounted
8127698	CJ	1977	ALL	15 gallon / rear mounted
8128585	CJ	1978-86	ALL	15 gallon / rear mounted
8125753	J10, J20	1962-78	ALL	20 gallon
83500267	XJ	1984-93	ALL	20 gallon w/ carb. or Diesel
83502633	XJ	1984-93	ALL	20 gallon w/ Fuel injection
83502960	YJ	1987-90	4.2L	15 gallon

© 2003 Projekt 4x4

FUEL TANK COMPONENTS: (Not Pictured)

REPLACES PART #	DESCRIPTION	MODEL	YEAR	DESCRIPTION
929669	Lock ring	CJ	1972-86	
941521	Lock ring seal	CJ	1972-86	
5357970	Filler hose	CJ	1979-86	
5357971	Vent hose	CJ	1979-86	
5356651	Strap (to skid plate)	CJ	1977-86	w/ 15 gallon tank
		YJ	1987-95	

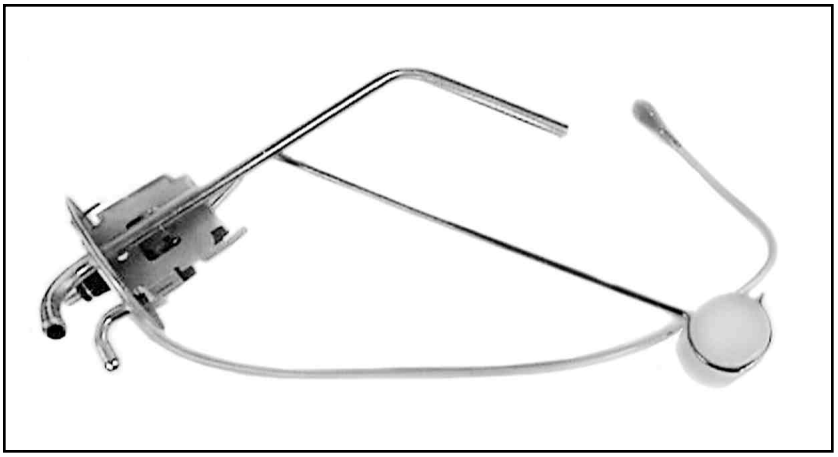

FUEL TANK SENDING UNITS:

GAS TANK REPLACMENT PART NO.	SENDING UNIT REPLACEMANT PART NO.
640685	640694
912008	914850
5355314	5357373
8127698	5357373
8128585	5357373
	5362090 (CJ w/ 20 gallon 1982-86)
8125753	5357677
	5358560 (SJ Cherokee & Wagoneer 1970-79)

© 2003 Projekt 4x4

Fuel

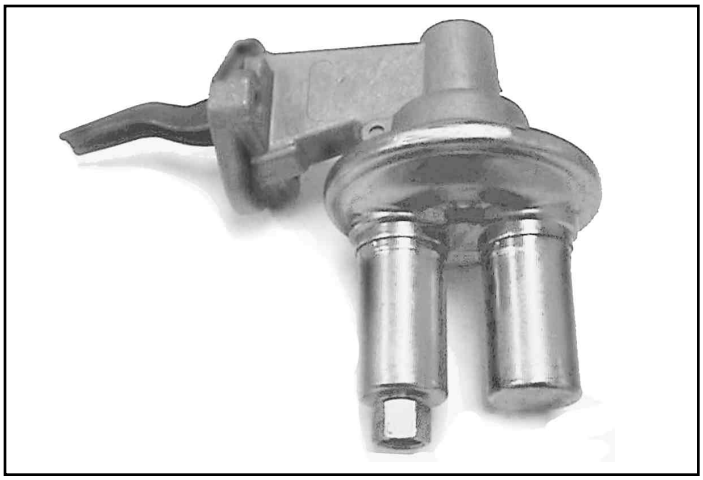

FUEL PUMP:

REPLACES PART #	MODEL	YEAR	ENGINE	DESCRIPTION
8132364	CJ	1980-83	GM 2.5L	
3228191	CJ	1981-86	2.5L, 4.2L	w/ AMC 2.5L
	SJ	1987-90	4.2L	
	YJ	1987-90	4.2L	w/ rear inlet fitting
3228195	CJ	1974-81	5.2L	
	SJ	1981-91	5.9L	
3240172	SJ	1981-86	4.2L	
	YJ	1987-90	4.2L	w/ front inlet fitting
83502751	XJ	1984-90	2.5L	w/ fuel injection
83502995	YJ	1987-90	2.5L	w/ fuel injection
4637192	XJ	1987-93	4.0L	
4637192P	XJ	1987-93	4.0L	pump-only “Bosch” style
4762964	XJ	1994-95		
4637193	YJ	1991-93		
52018390P	YJ	1994-95		w/ 15 gallon tank
52018391P	YJ	1994-95		w/ 20 gallon tank

FUEL FILTER: (Not Pictured)

REPLACES PART #	MODEL	YEA R	ENGINE	DESCRIPTION
3230376	CJ	1981-86		w/ 15 gallon tank (in tank)
5361389	CJ	1981-86		w/ 20 gallon tank (in tank)
	SJ	1981-91		w/ 20 gallon tank (in tank)
53001248	XJ, YJ	1984-93		w/ carb. (in tank)
33000184	XJ, YJ	1984-90	2.5L	w/ fuel injection (in tank)
33000076	XJ, YJ	1986-96	2.5L, 4.0L	(on fuel line)
52005131	ZJ	1993-96		(on fuel line)

© 2003 Projekt 4x4

AIR FILTER: (Not Pictured)

REPLACES PART #.	MODEL	YEAR	ENGINE	DESCRIPTION
8991386	CJ	1981-86	2.5L, 4.2L	
	SJ	1981-90	4.2L	
	YJ	1987-90	4.2L	
	XJ	1984-86	2.8L	
8992661	CJ	1974-83	5.2L	
	SJ	1974-91	5.9L	
53004383	XJ	1987-00	2.5L, 4.0L	w/ EFI
83500999	XJ	1984-90	2.5L	w/ Carb.
53002184	XJ	1986	2.5L	w/ EFI
	YJ	1987-90	2.5L	w/ EFI
53006317	YJ	1991-95	2.5L, 4.0L	
53007386	ZJ	1993-98	ALL	
	WJ	1999-00	ALL	
83501843	XJ	1984-96	2.1L, 2.5L	w/ Diesel
4797777	TJ	1997-00	ALL	w/ foam
4797777R	TJ	1997-00	ALL	replacement filter

ACCELERATOR CABLE: (Not pictured)

REPLACES PART #	MODEL	YEAR	ENGINE	DESCRIPTION
999893	CJ	1974-75	5.2L	
999923	CJ	1974-75	4.2L	
5350750	CJ	1974-75	4.2L	w/ RHD
5356483	CJ	1976-77	5.2L	color coded “blue”
5356484	CJ	1976-77	4.2L	color coded “brown”
5357847	CJ	1977-80	4.2L	color coded “green”
5357931	CJ	1977-83	5.2L	color coded “white”
5362801	CJ	1981-86	4.2L	
5357953	CJ	1981-86	4.2L	w/ RHD
5358677	CJ	1981-86	4.2L	export
5361067	CJ	1981-83	2.5L	GM
5364684	CJ	1983-86	2.5L	AMC
5351419	SJ	1974-77	5.9L	
5351420	SJ	1974-76	4.2L	
5356569	SJ	1977	4.2L	
5357703	SJ	1977-80	4.2L	
53005205	SJ	1987-91	5.9L	
53005206	YJ	1987-90	2.5L	w/ fuel injection
52040430	YJ	1987-90	2.5L	w/ carb.
53000038	XJ	1984-86	2.8L	w/ 6 cyl.
53002422	XJ	1984-86	2.5L	w/ fuel injection
53005201	XJ	1987-90	4.0L	
52078443	ZJ	1993	4.0L	w/ man. trans.
52078530	ZJ	1993	4.0L	w/ auto trans. 42RE

© 2003 Projekt 4x4

Steering

Steering 10-1

Power Steering Gear 10-3
Manual Steering Gear 10-5
Power Steering Pump 10-6
Power Steering Hoses 10-7
Steering Shaft 10-8
CJ Linkage 10-9
ZJ Linkage 10-11
YJ Linkage 10-13
XJ Linkage 10-15

Back

© 2003 Projekt 4x4

Steering

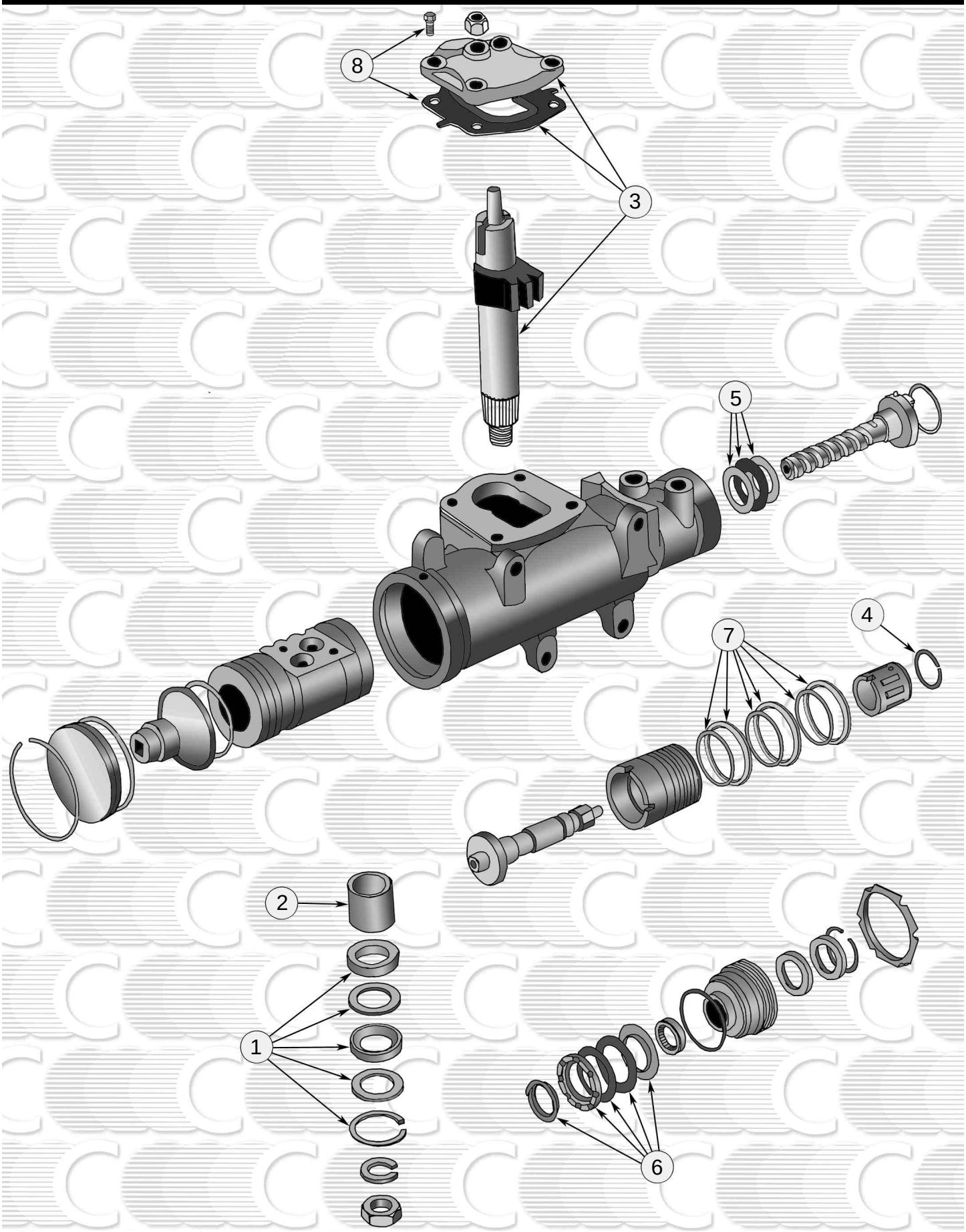

© 2003 Projekt 4x4

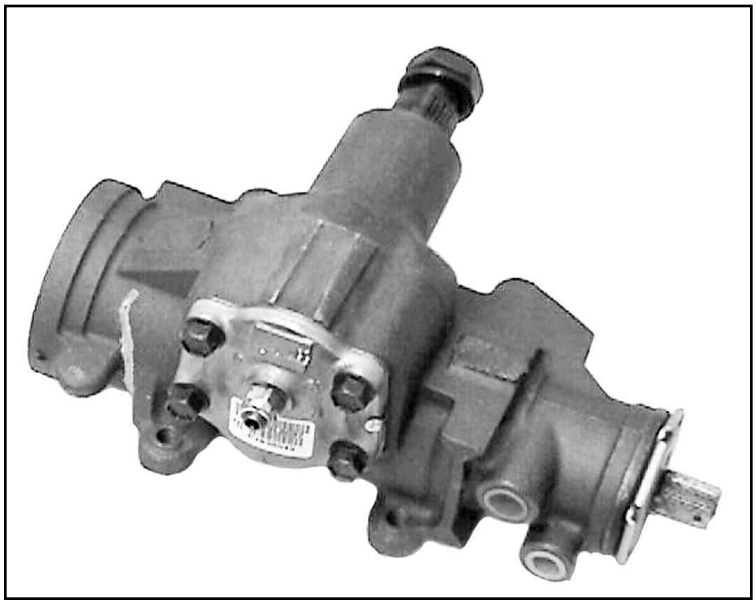

POWER STEERING:

5363231:	CJ 1978-86
52002085:	SJ 1981-91
52002737:	XJ 1984-90
52038002:	XJ 1991-94
52087753:	ZJ 1993-95 w/o Trailer tow
52087754:	ZJ 1993-95 w/ Trailer tow
52088328:	ZJ 1996 w/ Trailer tow
52088488:	ZJ 1997-98
52006511:	XJ (RHD) 1991-93
52088004:	XJ (RHD) 1994-95

NO.	DESCRIPTION	REPLACES PART#
1.	Seal Kit	8134568
2.	Bearing	4487154
3.	Shaft Package	8122819
4.	O-ring	8126250
5.	Bearing Package	8127645
6.	Bearing Package	8127644
7.	Ring & Seal Package	3204833
8.	Gasket Kit	8125038

© 2003 Projekt 4x4

MANUAL STEERING

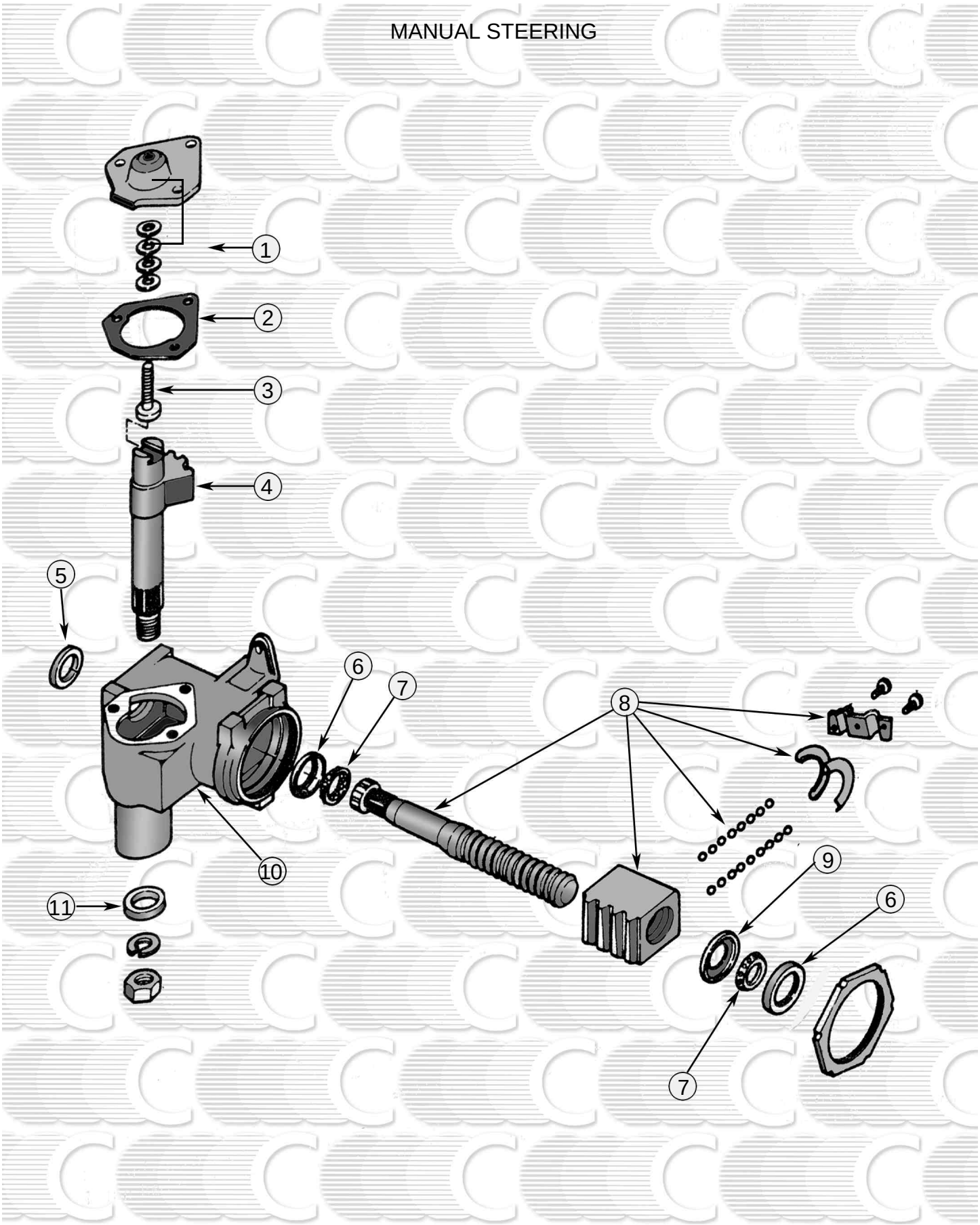

© 2003 Projekt 4x4

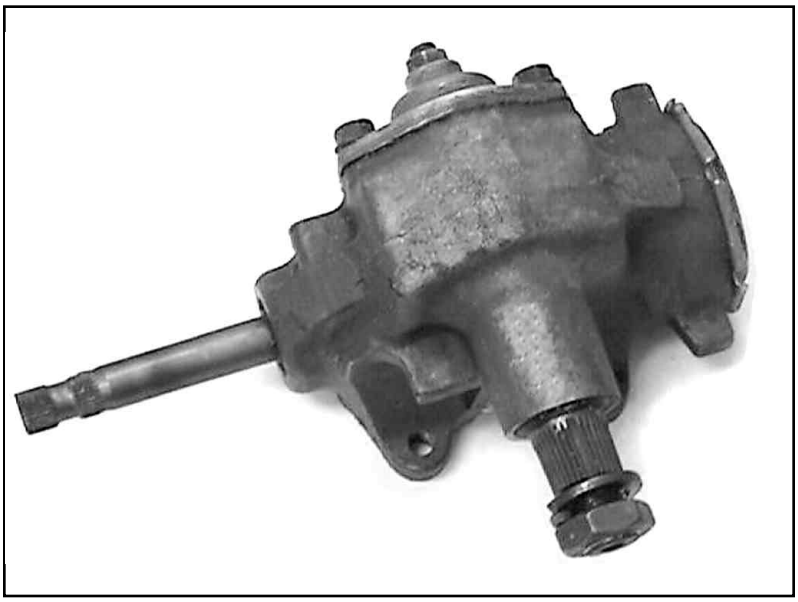

MANUAL (LESS POWER) CJ / YJ STEERING:

994509: CJ 1972-86, SJ 1965-86
52000089: XJ, YJ 1984-95, TJ 1997-99

NO.	DESCRIPTION	REPLACES PART#:
1.	Shim Kit	940521
2.	Gasket	940522
3.	Adjuster	4486135
4.	Shaft	8120221
5.	Seal	4486141
6.	Cup	3200492
7.	Bearing	3200491
8.	Sector Shaft Package	998504
	Sector Shaft Package (52000089)	83500248
9.	Retainer	3200493
10.	Bushing	3200496
11.	Seal	4486140

© 2003 Projekt 4x4

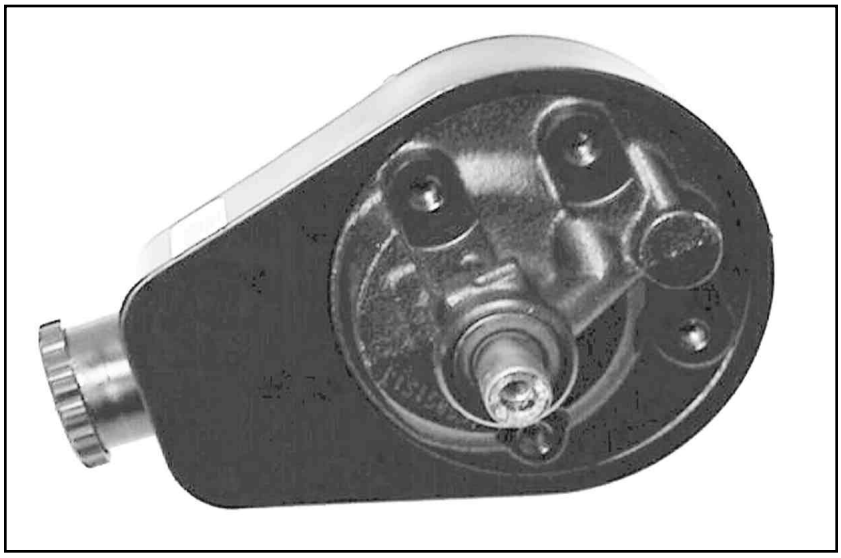

POWER STEERING PUMPS:

REPLACES PART #	MODEL	YEAR	DESCRIPTION
3251017	CJ	1978-86	w/ 4.2L, 5.2L & Diesel
33001907	CJ	1983-86	w/ AMC 2.5L
	YJ	1987-90	
53007140	YJ	1991-95	1993-95 w/ 4.0L
3237193	SJ	1981-84	
53002714	J10, GW	1985-10/22/90	Grand Wagoneer & J-10 only
52037568	GW	10/22/90-91	Grand Wagoneer only
53004817	XJ	1987-90	w/ 2.5L
52037566	XJ	1992-95	w/ 2.5L
53005437	XJ	1987-89	w/ 4.0L
52037565	XJ	1992	w/ 4.0L
53007383	XJ	1993-95	w/ 4.0L
52087871	XJ	1996-98	w/ 4.0L
53001765	XJ	1984-85	w/ Diesel
52037567	XJ	1987-94	w/ 2.1L diesel
52087658	ZJ	1993-95	w/ 5.2L w/ Trailer tow
52037812	ZJ	1993-95	w/ 5.2L w/o Trailer tow
52088022	ZJ	1993-95	w/ 4.0L w/ Trailer tow
53007383	ZJ	1993-95	w/ 4.0L w/o Trailer tow
52088139	ZJ	1996-98	w/o speed proportional steering
52088250	ZJ	1996-98	w/ speed proportional steering
52088663	ZG	1997-98	Europe

© 2003 Projekt 4x4

POWER STEERING HOSES:

1974-1990: (not pictured)

REPLACES PART #	MODEL	YEAR	ENGINE	DESCRIPTION
5370120	CJ	1983-86	2.5L AMC	pump to gear
5363660	CJ	1983-86	2.5L AMC	gear to reservoir
5370045	CJ	1980-81	2.5L GM	pump to gear
5370021	CJ	1980-81	2.5L GM	gear to reservoir
5363659	CJ	1982-83	2.5L GM	pump to gear
5370019	CJ	1982-83	2.5L GM	gear to reservoir
5370112	CJ	1980-81	4.2L	pump to gear
5370111	CJ	1980-81	4.2L	gear to reservoir
5362661	CJ	1982-86	4.2L	pump to gear
5363662	CJ	1982-86	4.2L	gear to reservoir
5370016	CJ	1974-83	5.2L	pump to gear
5370017	CJ	1974-83	5.2L	gear to reservoir
5370024	SJ	1981-86	4.2L	pump to gear
5370025	SJ	1981-86	4.2L	gear to reservoir
52003079	SJ	1986-91	5.9L	pump to gear
5370023	SJ	1986-91	5.9L	gear to reservoir
52040123	YJ	1987-90	2.5L	pump to gear
52040125	YJ	1987-90	2.5L	gear to reservoir
52003687	YJ	1988-90	4.2L	pump to gear
52002460	YJ	1988-90	4.2L	gear to reservoir
83504380	XJ	1984-85	2.5L	pump to gear
52001140	XJ	1984-85	2.5L	gear to reservoir
52002719	XJ	1986	2.5L	pump to gear
52002720	XJ	1986	2.5L	gear to reservoir
52001141	XJ	1984-86	2.8L	pump to gear
52001140	XJ	1984-86	2.8L	gear to reservoir
52003627	XJ	1987-90	4.0L	pump to gear
52003782	XJ	1987-90	4.0L	gear to reservoir

POWER STEERING HOSES:

1991-99: (Not Pictured)

REPLACES PART #	MODEL	YEAR	ENGINE	DESCRIPTION
4637915	XJ, ZJ	1991-96	4.0L	pump to gear
52037645	XJ, ZJ	1991-93	4.0L	gear to reservoir
52037644	YJ	1991-95	4.0L	pump to gear
52038016	YJ	1991-95	4.0L	gear to reservoir
52004989	YJ	1991-95	4.0L	reservoir to pump
52038014	YJ	1991-95	2.5L	pump to gear
52038016	YJ	1991-95	2.5L	gear to reservoir
52005411	YJ	1991-95	2.5L	reservoir to pump

© 2003 Projekt 4x4

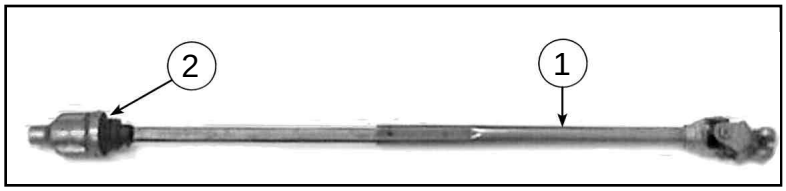

STEERING SHAFTS:

NO.	REPLACES PART #	MODEL	YEAR	DESCRIPTION
1.	5354934	CJ	1976-86	w/ power steering
2	998710K	CJ	1976-86	coupling kit w/ power steering
1.	5353135	CJ	1976-86	w/o power steering
2.	8121299	CJ	1976-86	coupling kit w/o power steering
1.	52007017	YJ	1987-95	w/ power steering
1.	52001948	XJ	1984-86	570 mm between mounting holes
1.	4713943	XJ	1987-96	w/ power

CJ LINKAGE LEFT

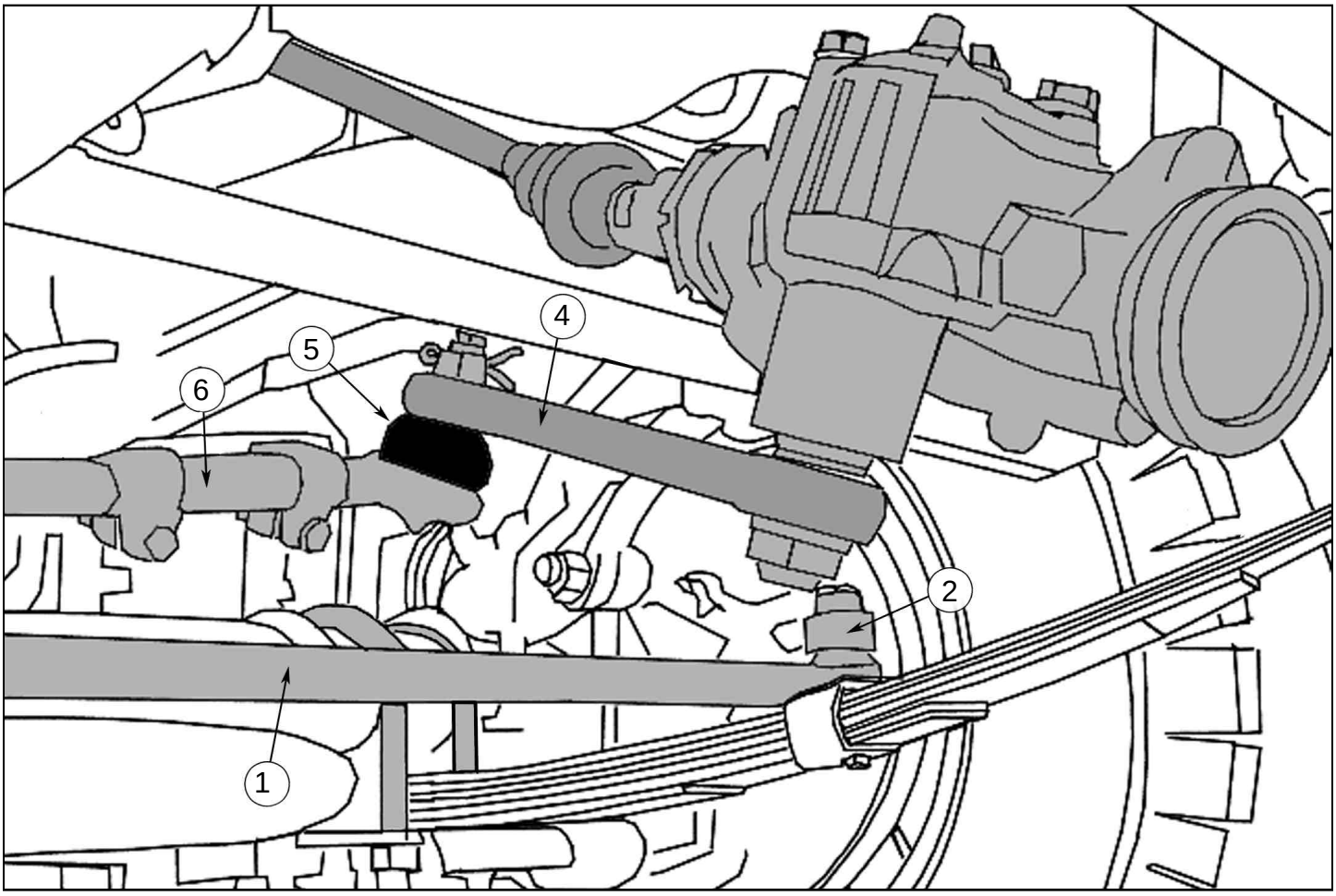

© 2003 Projekt 4x4

CJ LINKAGE RIGHT

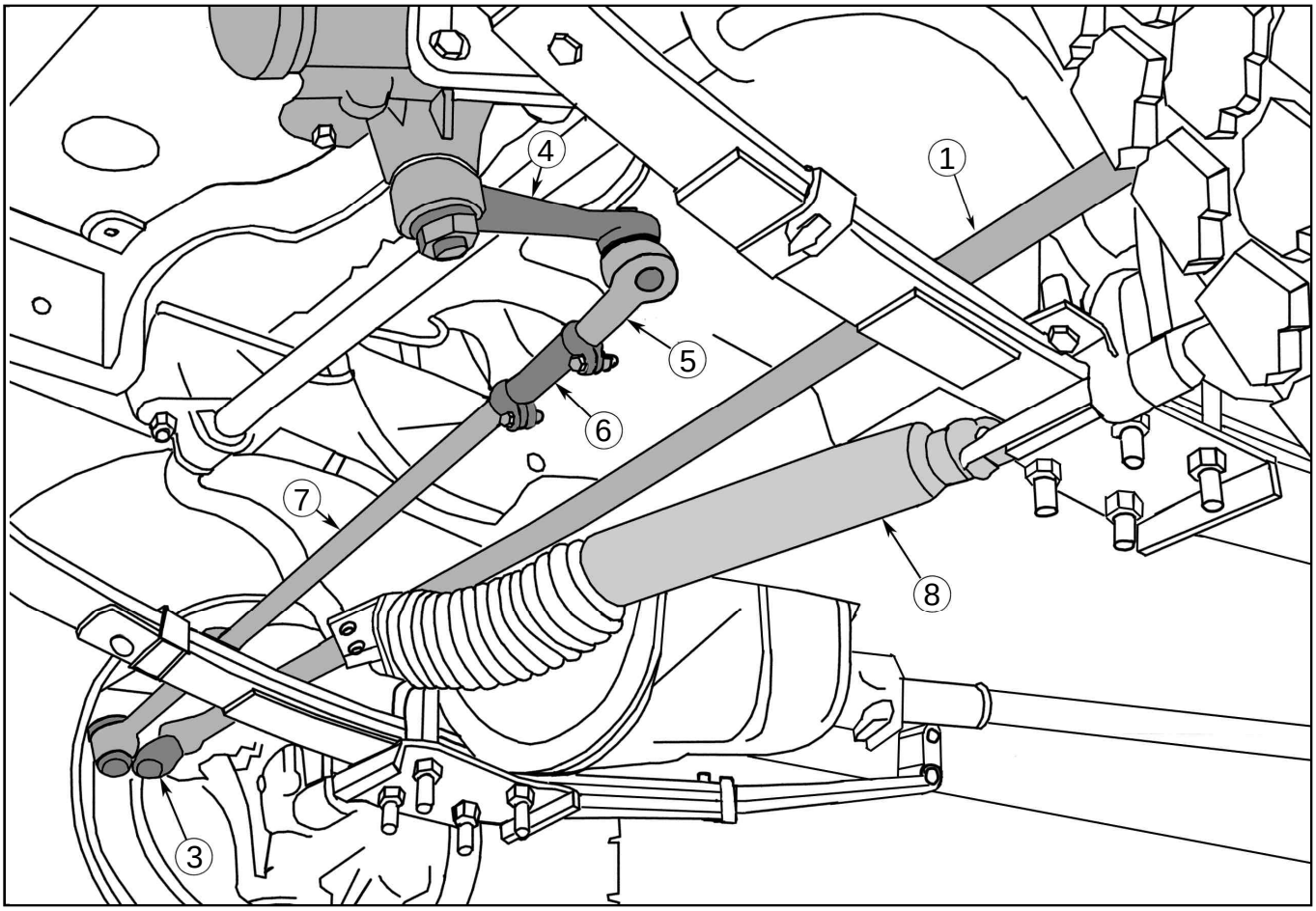

CJ STEERING LINKAGE 1972 - 86:

NO.	DESCRIPTION	REPLACES PART #
1.	Tube, steering (1972-81)	5350589
	Tube, steering (1982-83) CJ5	5350589
	Tube, steering (1982-86) CJ7, 8	8134290
1A.	Tie rod kit (1972-83) incl. No. 1, 2, 3	5350586
	Tie rod kit (1982-86) CJ7, 8	8134295
2.	Tie rod end (RH thread)	921317
3.	Tie rod end (LH thread)	920535
4.	Pitman arm (w/ power steering)	5356104
	Pitman arm (w/o power steering)	5356106
5.	Tie rod end, pitman	921317
5A.	Tie rod kit (1972-83) incl. No. 5, 6, 7	5356105
	Tie rod kit (1982-86) CJ7, 8	8134350K
6.	Tube, steering (Pitman to steering)	3200671
7.	Tie rod (1972-83) Pitman to steering	991744
	Tie rod (1982-86) Pitman to steering	8134350
8.	Steering damper (damper only)	940105
	Steering damper (damper assy.)	5351717

© 2003 Projekt 4x4

ZJ LINKAGE FRONT LEFT

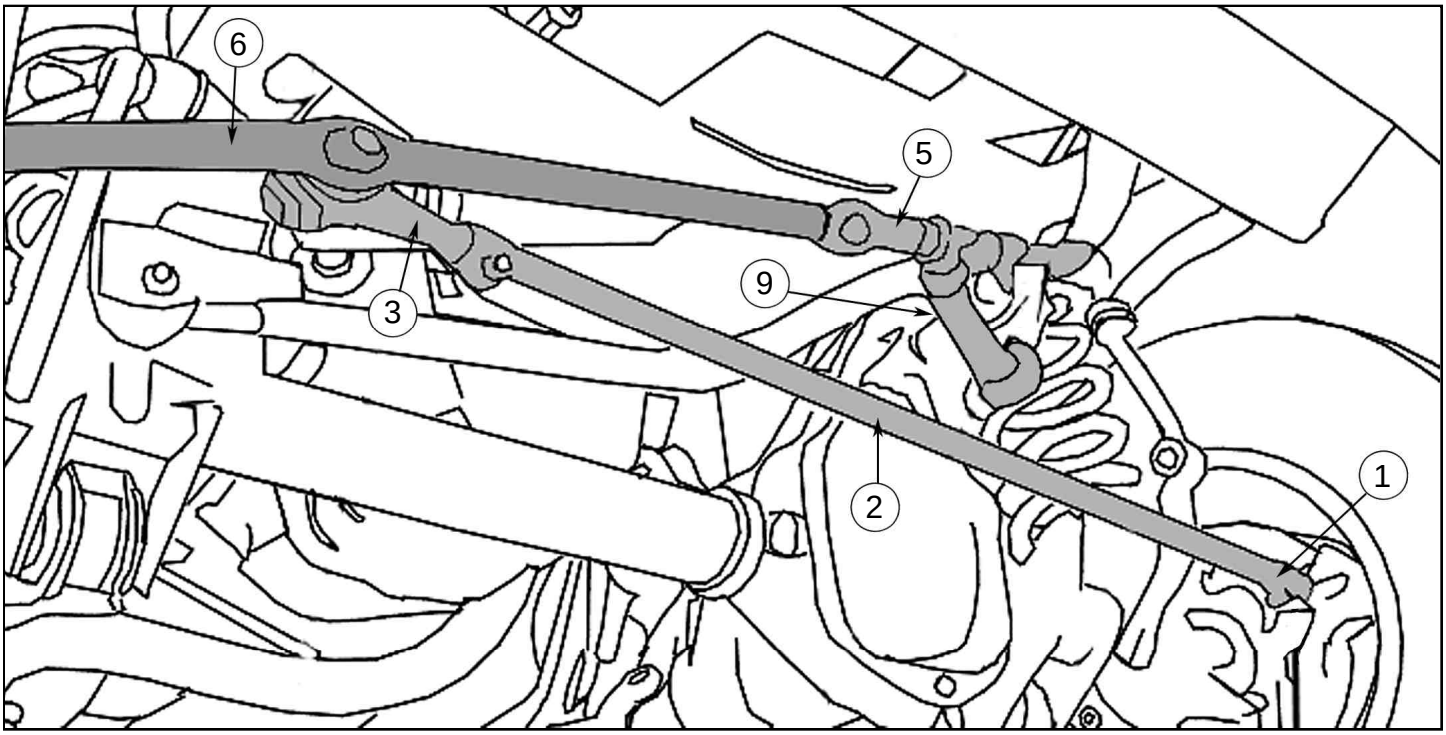

ZJ LINKAGE FRONT RIGHT

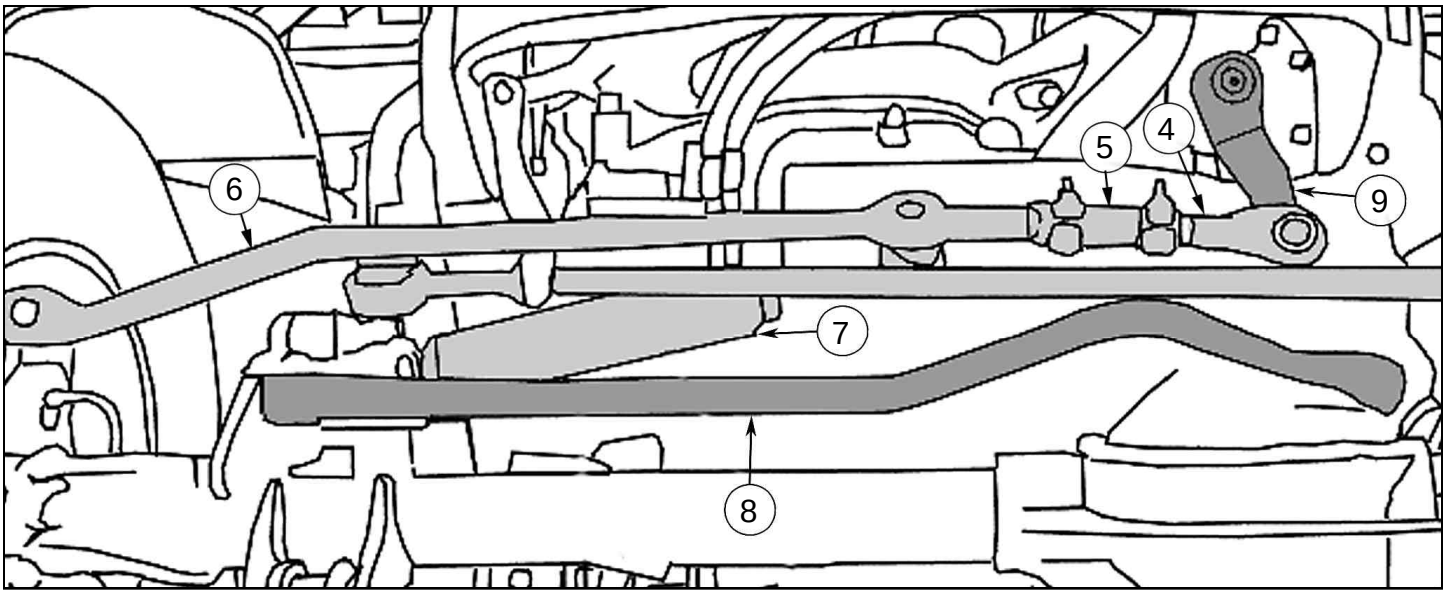

© 2003 Projekt 4x4

ZJ LINKAGE:

NO.	DESCRIPTION	REPLACES PART #
1.	Tie rod end w/4.0L	52005741
	Tie rod end w/5.2L	52005739
1A.	Tie rod kit w/4.0L incl. No.1,2,3	52087674K
2.	Tube, steering w/4.0L	520087674
3.	Tie rod end w/4.0L	52005740
	Tie rod end 4/5.2L	52037996
4.	Tie rod end, Pitman	52005739
5.	Tube, steering w/4.0L	52005742
6.	Tie rod (w/4.0L.) Pitman to steering	52005738
	Tie rod (w/5.2L.) Pitman to steering	52037994
7.	Steering damper	52087827
8.	Track bar	52007118
9.	Pitman arm	52005285

© 2003 Projekt 4x4

YJ LINKAGE LEFT

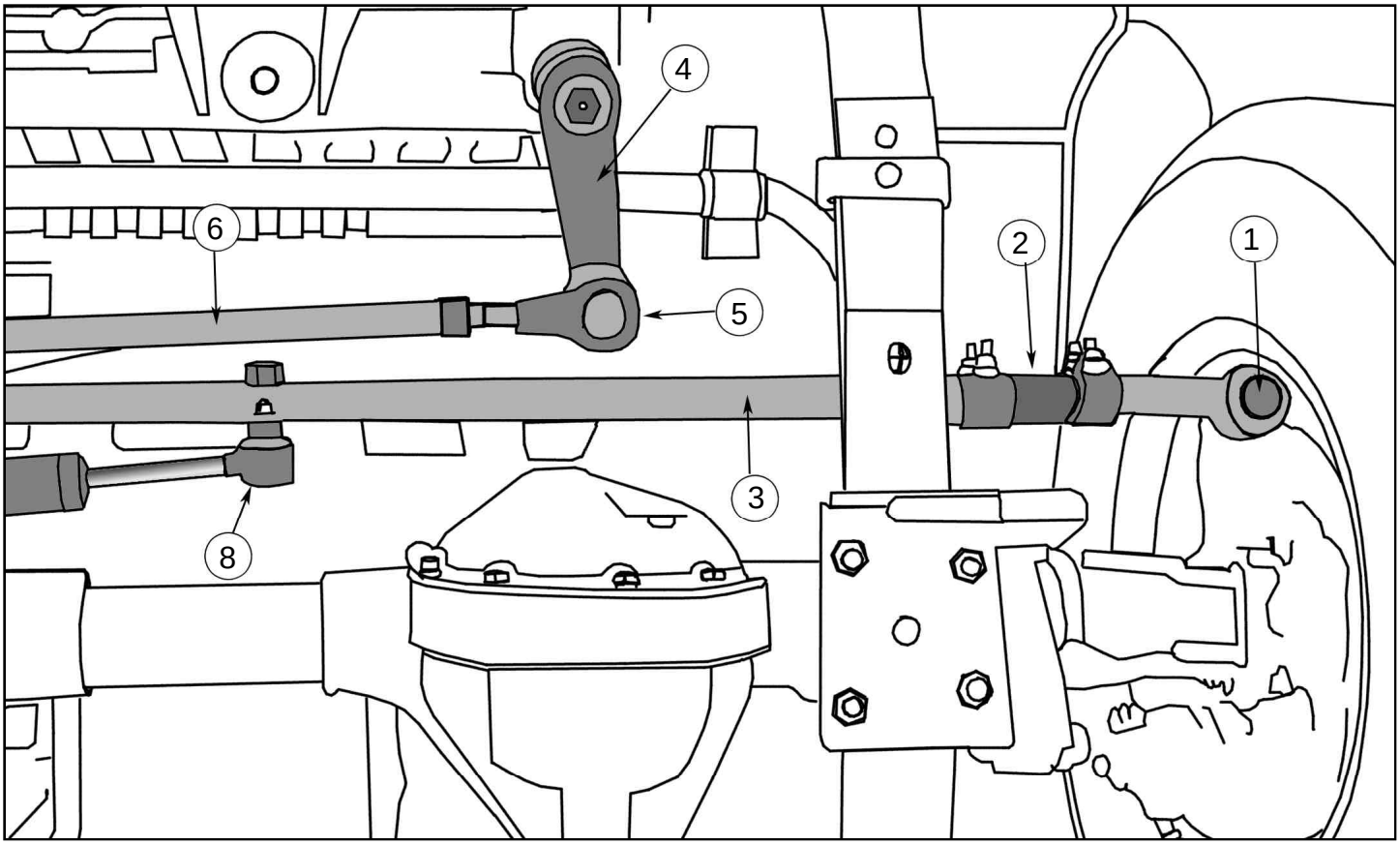

YJ LINKAGE RIGHT

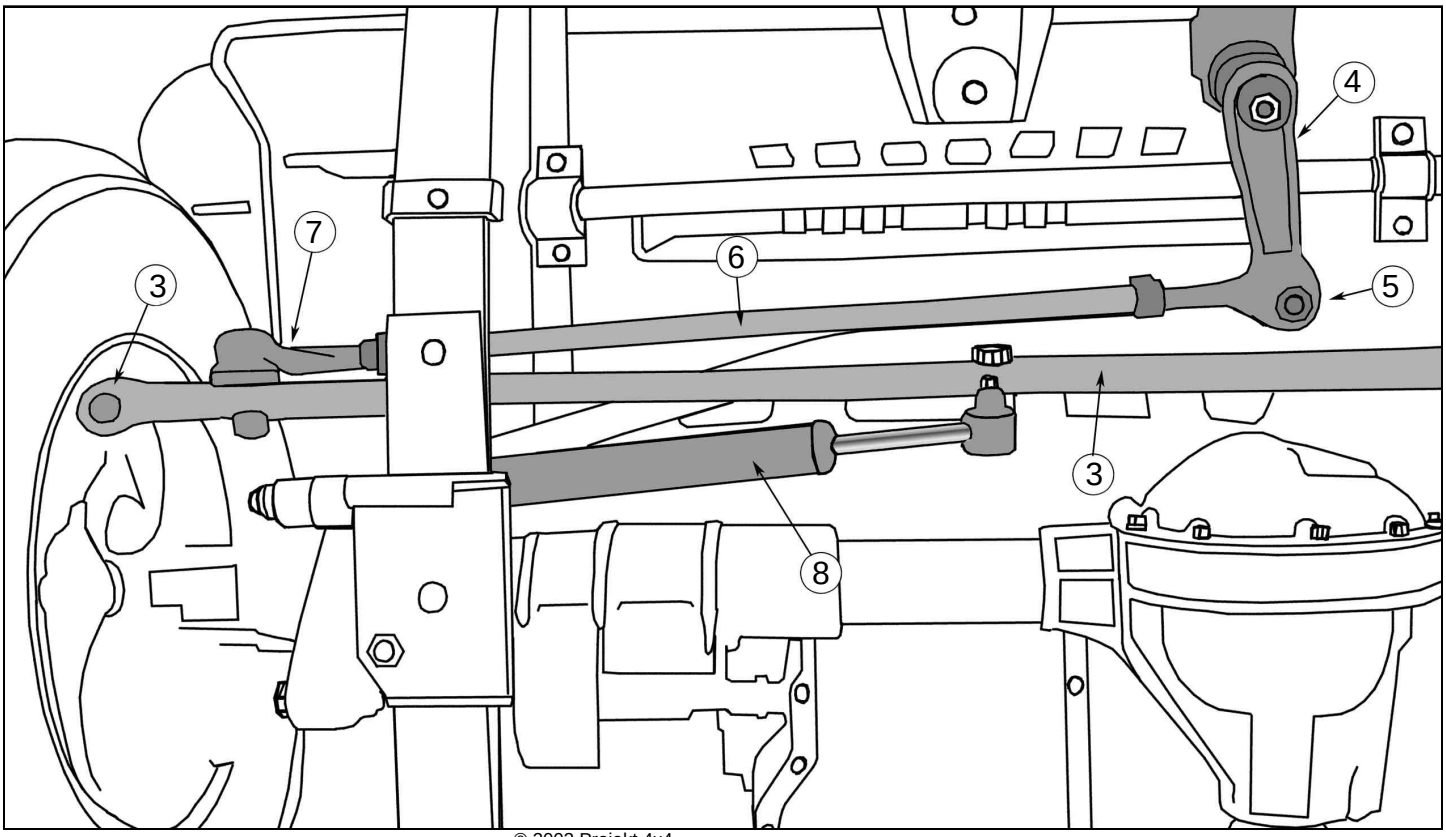

© 2003 Projekt 4x4

YJ STEERING LINKAGE:

NO.	DESCRIPTION	REPLACES PART#:
1.	Tie rod end (1987-90)	52002541
	Tie rod end (1991-95)	52005739
1A.	Tie rod kit (1987-90) incl. No. 1, 2, 3	52002541K
	Tie rod kit (1991-95)	52005739K
2.	Tube, steering (1987-90)	52002544
	Tube, steering (1991-95)	52006606
3.	Tie rod (1987-90)	52002540
	Tie rod (1991-95)	52006602
4.	Pitman arm (w/ power steering)	52040112
	Pitman arm (w/o power steering)	52040110
5.	Tie rod end, pitman (1987-90)	52000598
	Tie rod end, pitman (1991-95) LH thread	52005741
5A.	Tie rod kit (1987-90) incl. No. 5, 6, 7	52002700K
	Tie rod kit (1991-95)	52006608K
6.	Tube, steering (1987-90) Pitman to steering	52002700
	Tube, steering (1991-95) Pitman to steering	52006608
7.	Tie rod (1987-90) Pitman to steering	52000599
	Tie rod (1991-95) RH thread	52005740
8.	Steering damper	52002739

© 2003 Projekt 4x4

XJ LINKAGE LEFT

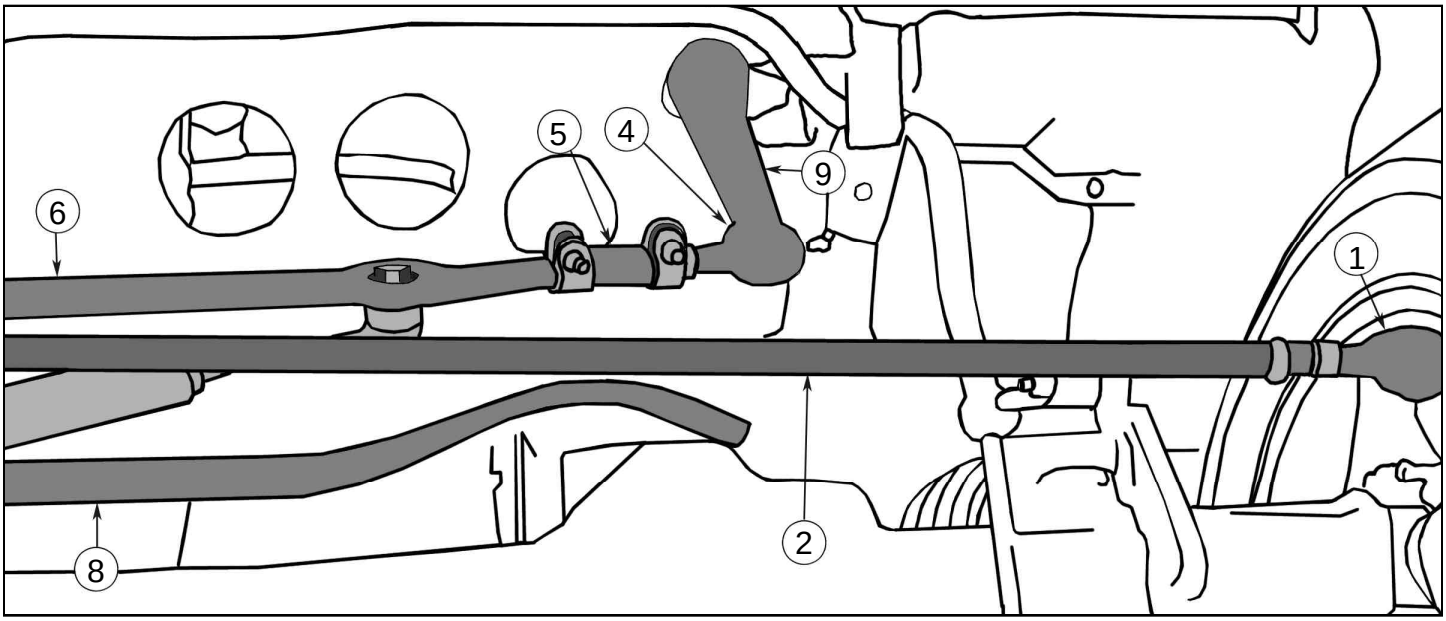

XJ LINKAGE RIGHT

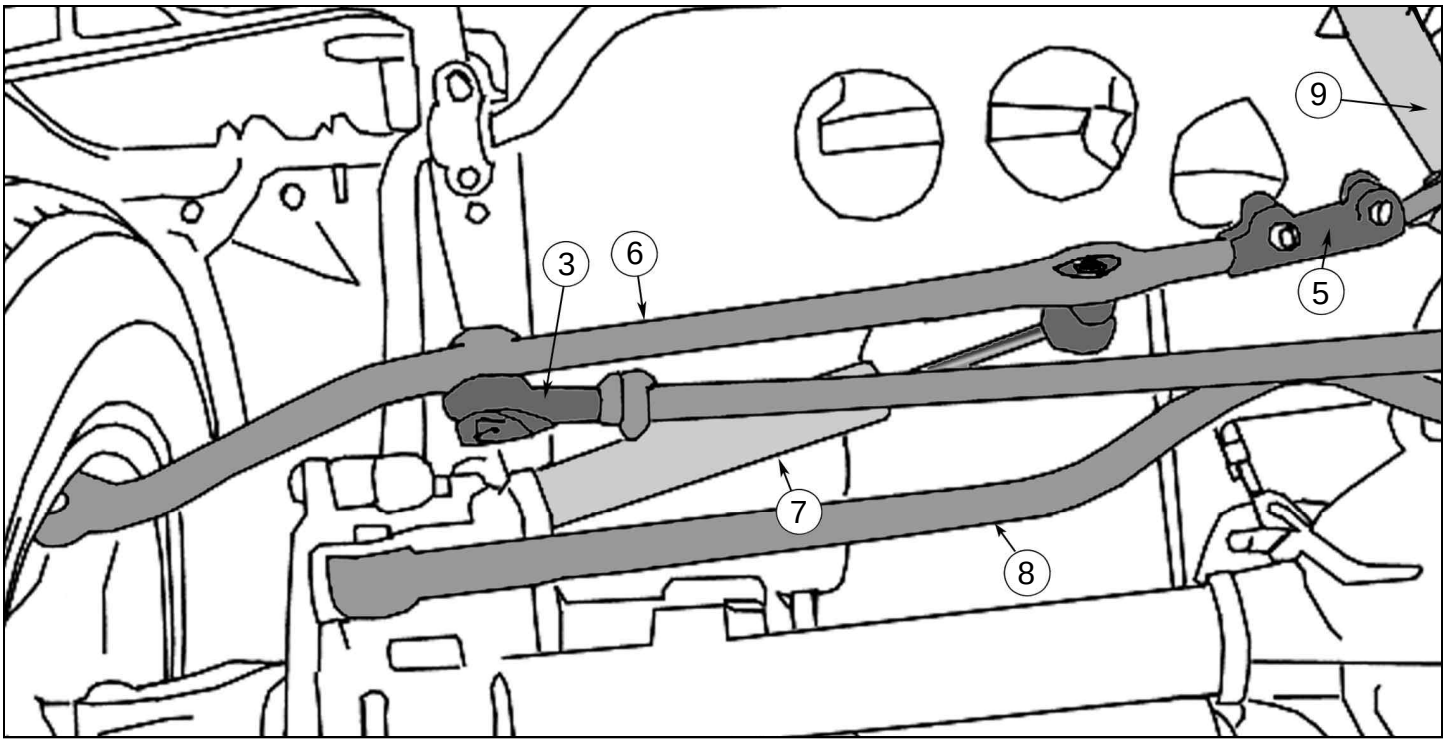

© 2003 Projekt 4x4

XJ STEERING LINKAGE

NO.	DESCRIPTION	REPLACES PART#
1.	Tie rod end (1984-90)	52000598
	Tie rod end (1991-96)	52005741
1A.	Tie rod kit (1984-90) incl. No. 1,2,3	52000596K
2.	Tube steering (1984-90)	52000596
	Tube steering (1991-96)	52005743
3.	Tie rod end (1984-90)	52000599
	Tie rod end (1991-96)	52005740
4.	Tie rod end, Pitman (1984-90)	52005739
	Tie rod end, Pitman (1991-96)	52005739
4A.	Tie rod kit (1984-86) incl. No. 4,5,6	52000601K
	Tie rod kit (1991-96) incl. No. 4,5,6	52006592K
5.	Tube, steering (1984-86)	52000604
	Tube, steering (1987-90)	52001736
	Tube, steering (1991-96)	52005742
6.	Tie rod, Pitman to steering	52000601
	Tie rod, Pitman to steering	52006592
7.	Steering damper (1984-90)	3236097
	Steering damper, heavy duty (1984-90)	3236097HD
	Steering damper (1991-96)	52087827
8.	Track bar (1984-90)	52003918
	Track bar (1991-96)	52007118
9.	Pitman arm (w/ power steering)	52000615
	Pitman arm (w/p power steering)	52000616

© 2003 Projekt 4x4

Suspension

Suspension 11-1

CJ 11-3
XJ 11-5
ZJ 11-6
YJ 11-9

Back

© 2003 Projekt 4x4

Suspension

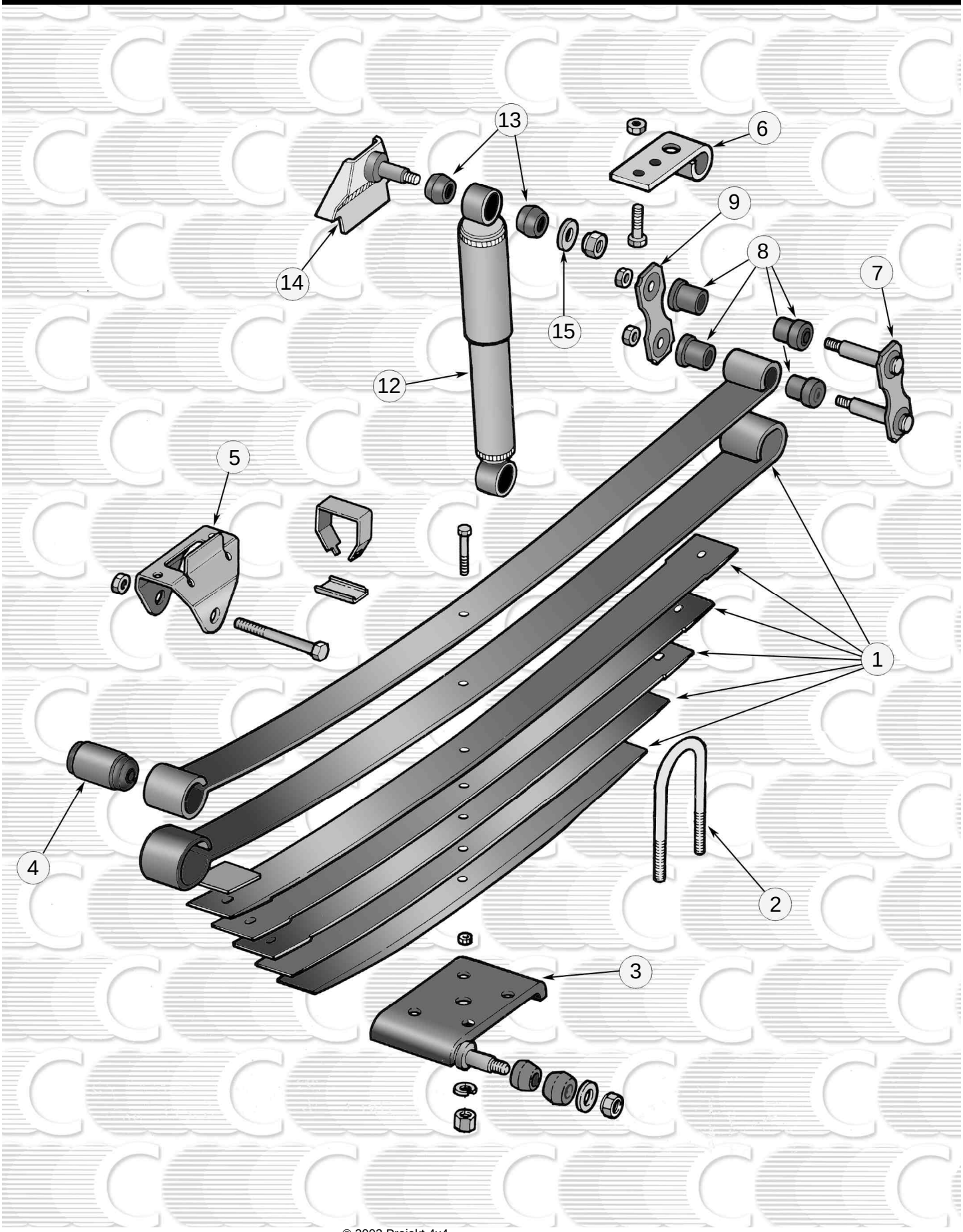

© 2003 Projekt 4x4

CJ FRONT SUSPENSION:

NO.	DESCRIPTION	REPLACES PART#:
1.	Leaf Spring (4 leaf)	5363229
	Leaf Spring (7 leaf)	5354892
2.	U-Bolt (3.06” wide)	8130369
	U-Bolt (3.75” wide)	8130370
3.	Spring Plate, Left	5359011
	Spring Plate, Right	5359012
4.	Bushing	5353851
5.	Spring Hanger	8127712
6.	Spring Bracket	5355689
7.	Shackle	5357620
	Shackle Kit	5357620K
8.	Bushing, Shackle	5355966
9.	Shackle Plate	5357497
10.	Link (w/ light spring)	5364121 (NP)
	Link (w/ heavy spring)	5364120 (NP)
11.	Sway Bar Cushion	5361674 (NP)
12.	Shock (STD)	8133289
	Shock (H.D.)	8133290
	Shock (H.D.) 82-86	8133291
13.	Grommet, Shock	637936
14.	Bracket, Shock	8126587
15.	Washer, Shock	4488495

CJ REAR SUSPENSION:

NO.	DESCRIPTION	REPLACES PART#:
1.	Leaf Spring (6 Leaf)	5363331
	Leaf Spring (9 leaf)	5356423
2.	U-Bolt	8130369
3.	Spring Plate, Left	5363439
	Spring Plate, Right	5363440
4.	Bushing	5355369
5.	Spring Hanger	8127712
6.	Spring Bracket	5355281
7.	Shackle	5357497
	Shackle Kit	5357497K
8.	Bushing, Shackle	5355841
12.	Shock (STD)	8133294
	Shock (H.D.)	8133295
	Shock (H.D.)	8350017
13.	Grommet, Shock	637936
15.	Washer, Shock	4488495

© 2003 Projekt 4x4

FRONT

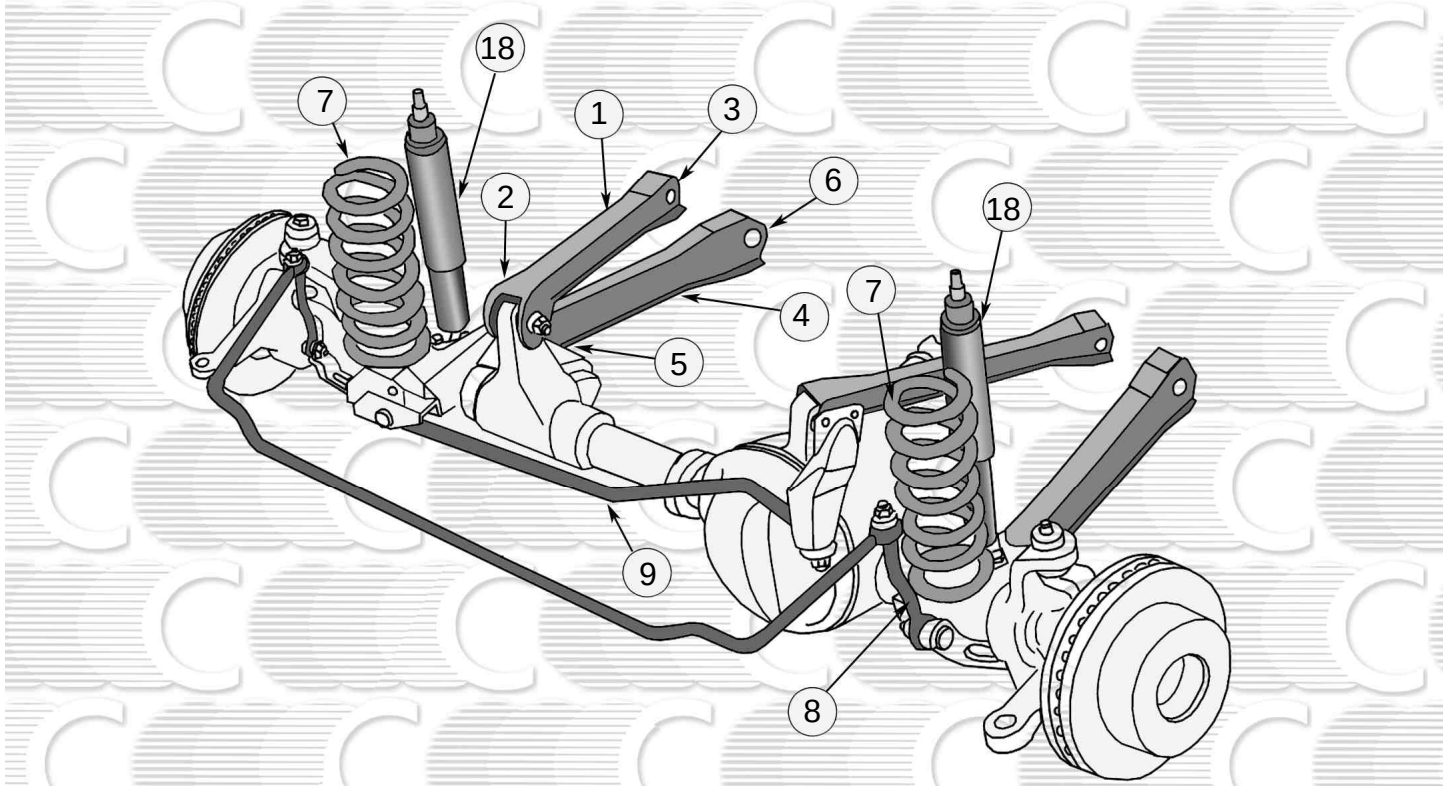

REAR

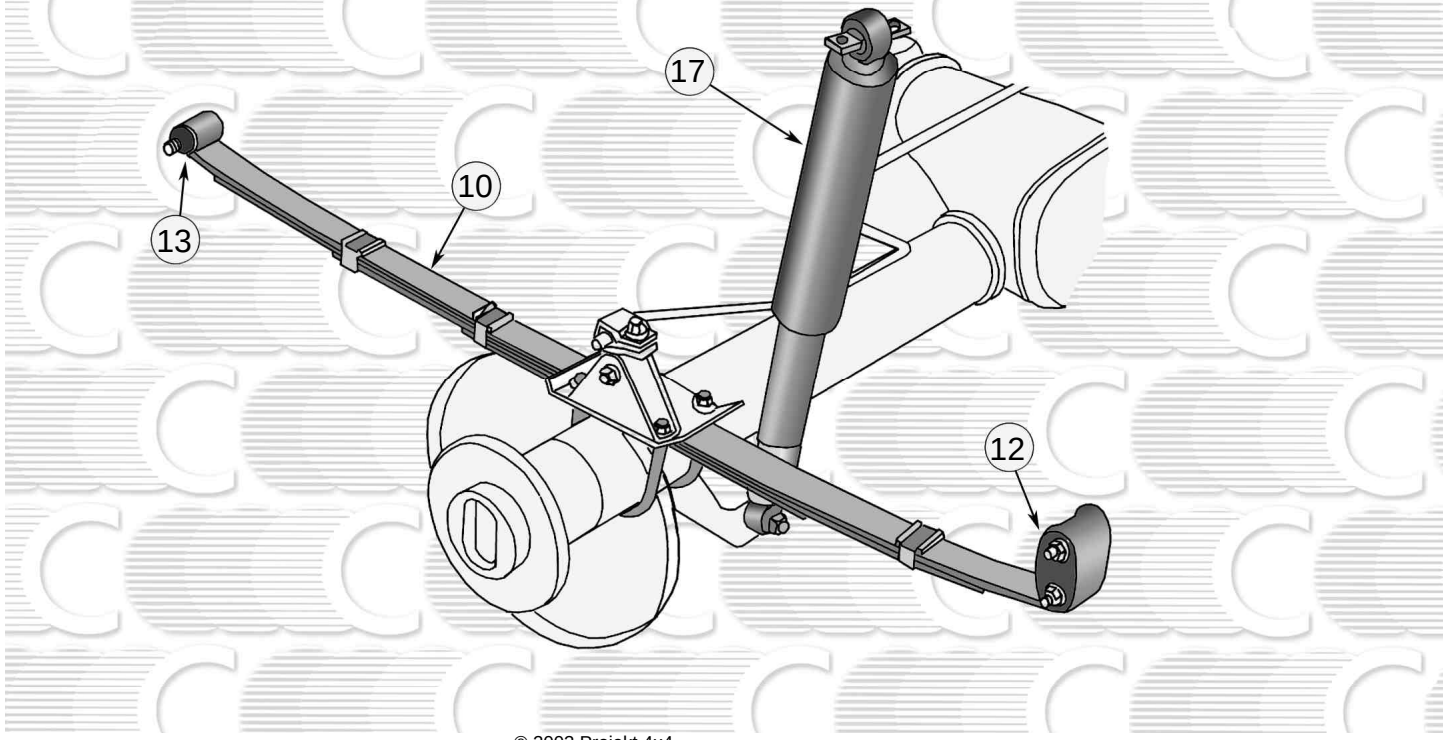

© 2003 Projekt 4x4

XJ FRONT SUSPENSION:

1984-1990

NO.	DESCRIPTION	REPLACES PART#
1.	Arm, UPPER	52000213
2.	Arm, UPPER-Front Bushing	52000211
3.	Arm, UPPER-Rear Bushing	52000211
4.	Arm, LOWER	52001162
5.	Arm, LOWER-Front Bushing	52001161
6.	Arm, LOWER -Rear Bushing	52001161
7.	Coil Spring (GF)	52001122
8.	Link	52003360
8A.	Link Grommet	52001132 (NP)
9.	Track Bar	52003918
18.	Shock Absorber STD	83500312
	Shock Absorber HD	83500314

XJ FRONT SUSPENSION:

1991-1998

NO.	DESCRIPTION	REPLACES PART#
1.	Arm, UPPER	52087710
2.	Arm, UPPER-Front Bushing	52038025
3.	Arm, UPPER-Rear Bushing	52038025
4.	Arm, LOWER	52001162
5.	Arm, LOWER-Front Bushing	52001161
6.	Arm, LOWER-Rear Bushing	52001161
7.	Coil Spring (GF)	52001122
8.	Link	52037849
8A.	Link Grommet	52001132 (NP)
9.	Track Bar	52007118
18.	Shock Absorber STD	4637102
	Shock Absorber HD	4637525

XJ REAR SUSPENSION:

1984-1998

NO.	DESCRIPTION	REPLACES PART#
10.	Leaf Spring Assembly, STD. (LC,EC)	52000051
	Leaf Spring Assembly, H.D. (LK)	52000544
	Leaf Spring Assembly, H.D. (LL,EL)	52000545
	Leaf Spring Assembly, H.D. (LM)	52000707
	Leaf spring Assembly, H.D. (LS)	52002390
	Leaf Spring Assembly, H.D. (LT)	52002392
11.	Shackle	52000507 (NP)
12.	Leaf Spring Bushing	52000503
13.	Leaf Spring Bushing	52000504
14.	Axle Bumper	52002393 (NP)
15.	Link	52001094 (NP)

© 2003 Projekt 4x4

16.	Sway Bar Cushion	52001145 (NP)
17.	Shock Absorber, LT (1984-1990)	83501160
	Shock Absorber, STD. (1984-1990)	83501161
	Shock Absorber, STD. (1991-1993)	4637103
	Shock Absorber, STD. (1994-1998)	52087777
	Shock Absorber, H.D. (1991-1993)	4637523
	Shock Absorber, H.D. (1984-1998) (With Off-Road package)	83504212

ZJ FRONT SUSPENSION:

1993-1996

NO.	DESCRIPTION	REPLACES PART#
1.	Arm, UPPER	52087711
2.	Arm, UPPER-Front Bushing	52087709
3.	Arm, UPPER-Rear Bushing	52087709
4.	Arm, LOWER	52087786
5.	Arm, LOWER-Front Bushing	52037830
6.	Arm, LOWER-Rear Bushing	52087720
7.	Coil Spring (GK)	52088104
8.	Link	52037849
8A.	Link Grommet	52001132 (NP)
8B.	Link Retainer	52087668 (NP)
9.	Track Bar	52007118
18.	Shock Absorber, STD. W/4.0L	52087840
	Shock Absorber, STD. W/5.2L	52089057
	Shock Absorber, H.D. (w/Up-Country or Off-Road package)	4741675

ZJ FRONT SUSPENSION:

1997-1998:

NO.	DESCRIPTION	REPLACES PART#
1.	Arm, UPPER	52087711
2.	Arm, UPPER-Front Bushing	52087709
3.	Arm, UPPER-Rear Bushing	52087709
4.	Arm, LOWER	52088312
5.	Arm, LOWER-Front Bushing	52088167
6.	Arm, LOWER-Rear Bushing	52087720
7.	Coil Spring (GK)	52088104
8.	Link	52088437
8A.	Link Grommet	52001132 (NP)
8B.	Link Retainer	52087668 (NP)
9.	Track Bar	52007118
18.	Shock Absorber, STD.	4723036
	Shock Absorber, H.D. (w/Up-Country or Off-Road Package)	4741675

© 2003 Projekt 4x4

ZJ REAR SUSPENSION:

1993-1996

NO.	DESCRIPTION	REPLACES PART#
1.	Arm, UPPER	52037551
2.	Arm, UPPER-Front Bushing	52038020
3.	Arm, UPPER-Rear Bushing	52038020
4.	Arm, LOWER	52087716
5.	Arm, LOWER-Front Bushing	52038026
6.	Arm, LOWER-Rear Bushing	52038026
8A.	Link Grommet	52001132 (NP)
8B.	Link Retainer	52087668 (NP)
9.	Track Bar	52005642
18.	Shock Absorber, STD.	4723036
	Shock Absorber, H.D. (w/Up-Country or Off-Road Package)	4741676

ZJ REAR SUSPENSION:

1997-1998:

NO.	DESCRIPTION	REPLACES PART#
1.	Arm, UPPER	52088520
2.	Arm, UPPER-Front Bushing	52087709
3.	Arm, UPPER-Rear Bushing	52087709
4.	Arm, LOWER	52088521
5.	Arm, LOWER Front Bushing	52038026
6.	Arm, LOWER-Rear Bushing	52038026
8A.	Link Grommet	52001132 (NP)
8B.	Link Retainer	52087668 (NP)
9.	Track Bar	52087968
18.	Shock Absorber, STD.	4723036
	Shock Absorber, H.D. (w/Up-Country or Off-Road Package)	4741676

© 2003 Projekt 4x4

YJ FRONT SUSPENSION

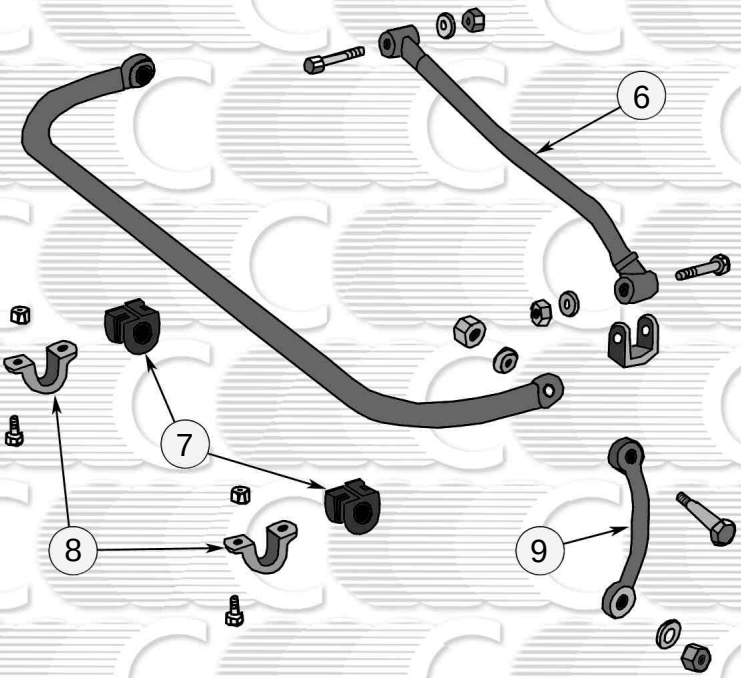

YJ REAR SUSPENSION

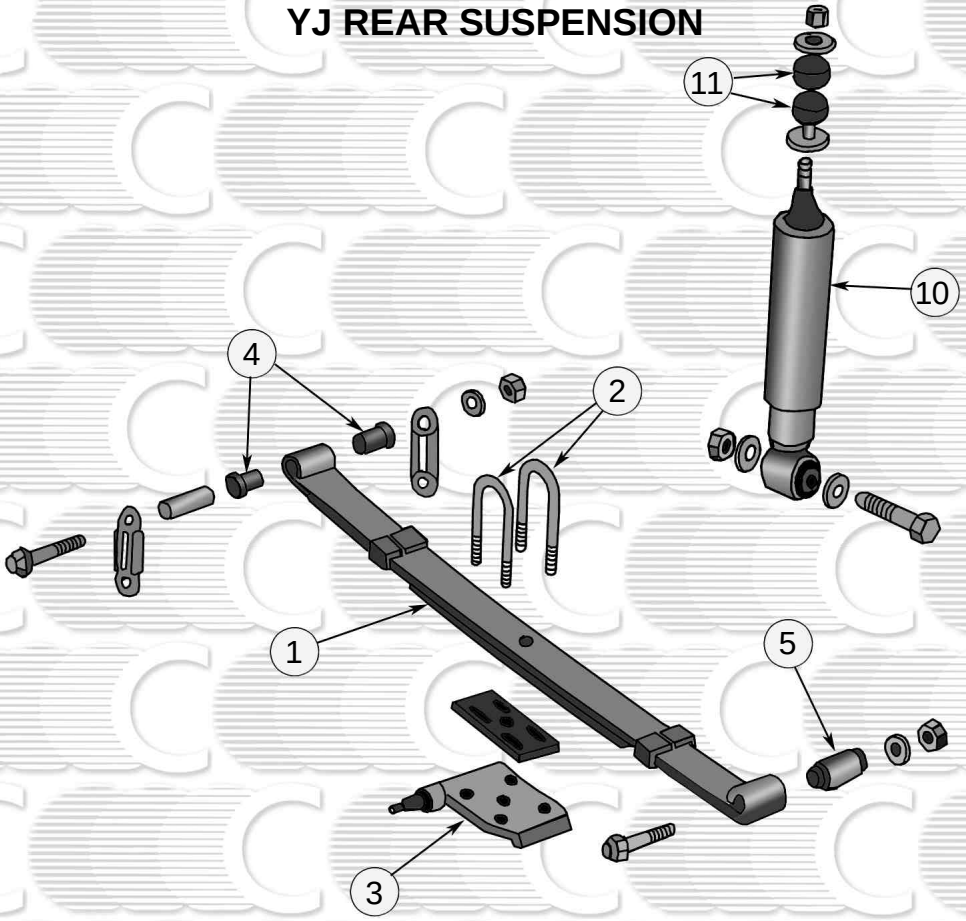

© 2003 Projekt 4x4

YJ FRONT SUSPENSION:

NO.	DESCRIPTION	REPLACES PART#
1.	Leaf Spring (STD)	4636975
	Leaf Spring (H.D.)	52003448
2.	U-Bolt (3.06” wide)	8130369
	U-Bolt (3.75” wide)	8130370
3.	Spring Plate, Left	52040407
	Spring Plate, Right	52040348
4.	Bushing	52002552
5.	Bushing	52002551
6.	Track Bar	52040403
7.	Sway Bar Cushion	52003143
8.	Bracket, Sway Bar Cushion	52040047
9.	Link	52002609
10.	Shock (STD)	83502866
	Shock (HD)	83502836
11.	Grommet, Shock	3216638

YJ REAR SUSPENSION:

NO.	DESCRIPTION	REPLACES PART#
1.	Leaf Spring (H.D.)	52003449
3.	Spring Plate	52006421
4.	Bushing	52002552
5.	Bushing	52002551
6.	Track Bar	52040404
10.	Shock (STD)	83502867
	Shock (H.D.)	83502837
11.	Grommet, Shock	3216638

© 2003 Projekt 4x4

Transmission

Transmission 12-1

AX 15 12-3
AX4 / AX5 12-7
T4 12-11
T5 12-13
SR4 12-17
T150 12-19
T 176 / T 177 12-21
BA 10 / 5 12-25

Back

© 2003 Projekt 4x4

AX 15 TRANSMISSION

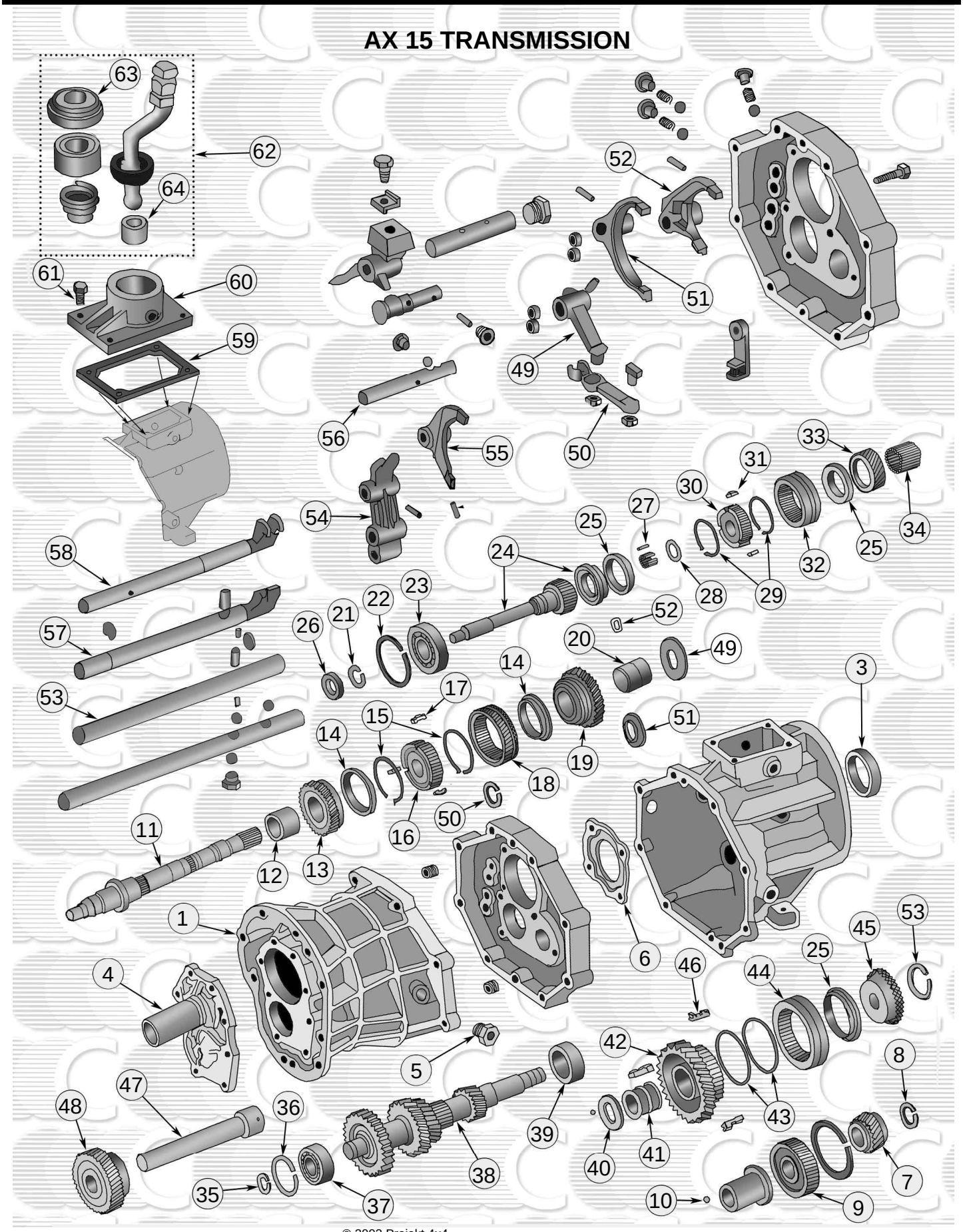

© 2003 Projekt 4x4

AX 15 TRANSMISSION:

NO.	DESCRIPTION	REPLACES PART#
3.	Adapter seal	83503108
5.	Drain plug	83500512
7.	5th gear, mainshaft	5252083
9.	Bearing, output	83506073
10.	Reverse ball	83500573
11.	Output shaft	83506243
12.	Bearing	83506076
13.	2nd gear (1989-91)	5252078
	2nd gear (1992-) use 1992-up instead	4636369
14.	Blocking ring	83506252
15.	Synchronizer spring	83506254
16.	1st & 2nd synchronizernhub	83506247
17.	Synchronizer key	83506250
18.	Reverse gear	5252082
19.	1st speed gear (1989-92)	5252077
	1st speed gear (1993-)	4636368
23.	Bearing, input	83506074
24.	Main drive gear (1987-91)	5252081
	main drive gear (1992-)	4636370
25.	Synchronizer ring	83506253
26.	Seal	5252053
27.	Roller	83506078
29.	Synch spring up to trans. serial no. 00705123 use	83506255
	after trans. serial no. 00705123 use	4637534
30.	3-4 Synchronizer hub	83506248
31.	3-4 Synchronizer key	83506251
32.	Synchronizer sleeve	83506249
33.	3rd gear	5252079
34.	Bearing	83506077
37.	Bearing	83506259
38.	Cluster gear (1987-91)	5252085
	Cluster gear (1992-)	4636371
39.	Bearing	83506080
40.	Washer	83506245
41.	Bearing	83506079
42.	5th counter gear	4637535
43.	Spring	83506254
44.	Sleeve	83506257
45.	Spacer	83506242
46.	Synchronizer key	83506256
47.	Reverse idler shaft	83506258
48.	Reverse idler gear	5252084
49.	Reverse fork	5252056
50.	Reverse shift arm	5252060

© 2003 Projekt 4x4

51.	Gearshift #2 fork	5252058
52.	Gearshift #1 fork	5252057
53.	Gearshift #3 shaft	5252070
54.	Reverse shift head	5252064
55.	Gearshift #3 fork	5252059
56.	Gearshift #5 shaft	5252065
57.	Gearshift #1 shaft	5252066
58.	Gearshift #2 shaft	5252068
59.	Gasket	5252043
60.	Control shift retainer	4864226
60A.	Control shift retainer seal	4864226X (NP)
61.	Bolt	83500525
62.	Gearshift lever (YJ)	5252055
	Gearshift lever (XJ)	5252042
63.	Boot	83500520
64.	Bushing	83500519
65.	Bearing and seal kit	BK-AX15 (NP)

© 2003 Projekt 4x4

AX4 / AX5 TRANSMISSION

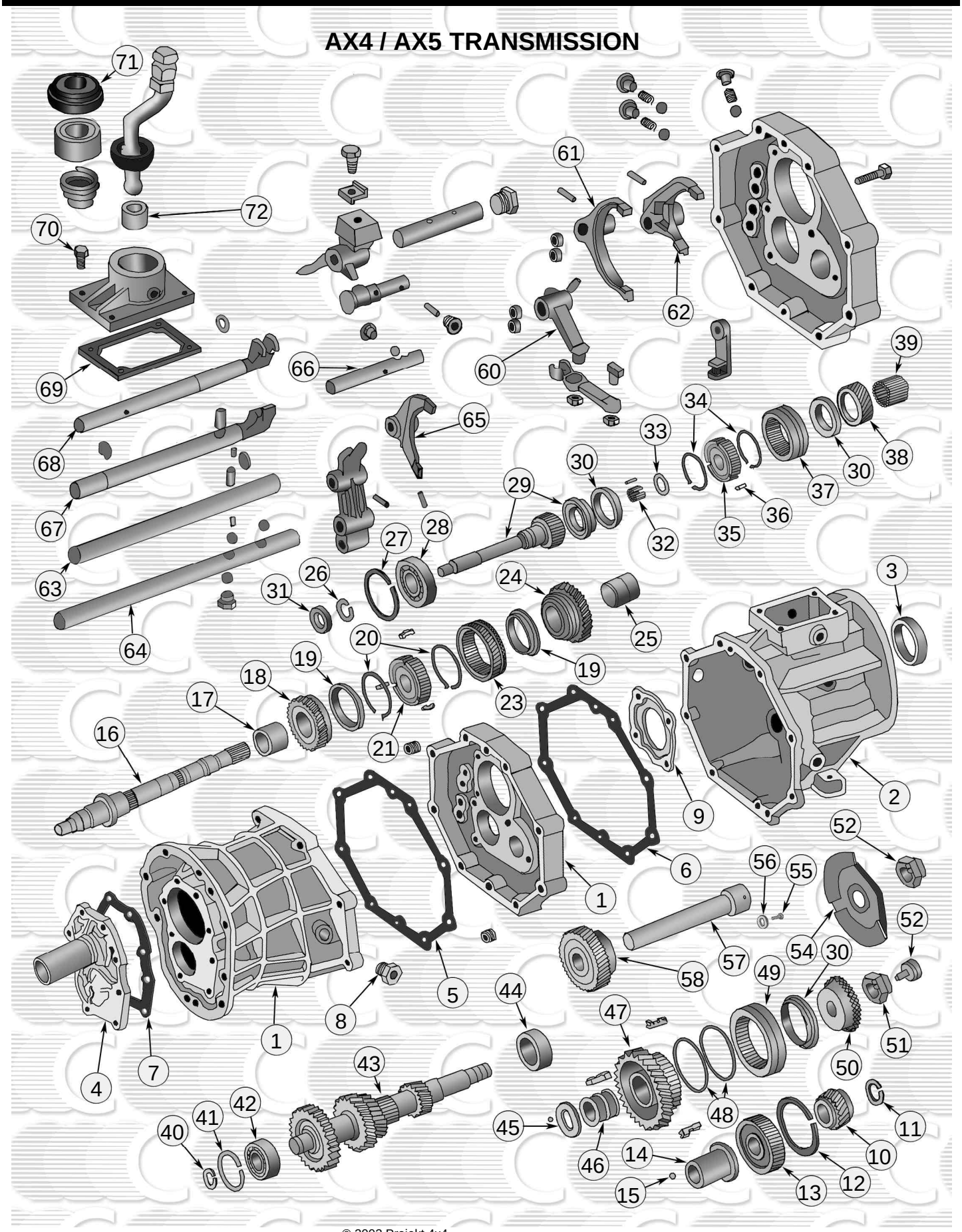

© 2003 Projekt 4x4

AX4 / AX5 TRANSMISSION:

NO.	DESCRIPTION	REPLACES PART#
3.	Adapter seal (1984-86)	83500620
	Adapter seal (1987-)	83503108
4.	Retainer (1987- up)	83503112
5.	Gasket	83500506
6.	Adapter gasket	83500507
10.	5th gear, mainshaft	83500971
13.	Rear bearing	83500575
	Rear bearing (11/88-)	83506030
14.	1st gear race	83500560
	1st gear race (11/88-)	83506026
15.	Reverse ball	83500573
16.	Main shaft (1987-)	83503105
17.	Bearing	83500577
18.	2nd gear	83500551
	2nd gear (11/88-)	83506018
19.	Blocking ring	83500567
20.	Synchronizer spring	83500569
21.	1st & 2nd synchronizer	83500561
22.	Synchronizer key	83500564
23.	Reverse gear	83500555
24.	1st gear	83500550
	1st gear (11/88-)	83506017
25.	1st gear bearing	83500578
	1st gear bearing (11/88)	83506031
28.	Front bearing (1984-86)	83500643
	Front bearing (1987-)	83502681
29.	Main drive gear (1987-)	83502682
	(10/88-up)	83506020
30.	Synchronizer ring	83500566
31.	Seal, input	83506045
32.	Roller (1987-) (14 pcs)	83502680
34.	Synchronizer spring	83500568
35.	3rd & 4th synchronizer	83500562
	3rd & 4th synchronizer (11/88-up)	83506027
36.	Synchronizer key	83500565
	Synchronizer key (11/88-up)	83506029
37.	Synchronizer sleeve	83500563
	Synchronizer sleeve (11/88-up)	83506028
38.	3rd gear	83500552
	3rd gear (11/88-)	83506019
39.	Bearing	83500576
42.	Bearing	83506032
43	Cluster gear (nut type)	83500557
	Cluster gear (AX/5 10/88-up)	83506023

© 2003 Projekt 4x4

Transmission

44.	Bearing	83500580
	Bearing (AX/5 10/88-)	83506033
45.	Washer (AX/5 10/88-)	83506025
46.	Bearing (AX/5)(under 5th gear)	83500644
47.	5th counter gear (AX/5 1984-86)	83500553
	5th counter gear (AX/5 1987-)	83506022
48.	Spring (AX/5)	83500568
49.	Sleeve (AX/5) thru 4/1993	83500642
	(from 4/6/1993-up)	4746657
50.	Spacer (AX/5)	83500639
52.	Nut	83500572
57.	Reverse idler shaft	83500570
58.	Reverse idler gear (1987-)	83503555
59.	Gasket kit	83500632
59A.	Gasket and seal kit	AX-GS
60.	Reverse fork	83500526
61.	Gearshift #2 fork	83502665
62.	Gearshift #1 fork	83502662
63.	Gearshift #3 shaft (AX/4)	83506053
	Gearshift #3 shaft (AX/5)	83506052
64.	Gearshift #4 shaft	83500538
65.	Gearshift #3 fork	83500637
66.	Gearshift #5 shaft	83500536
67.	Gearshift #1 shaft	83506055
68.	Gearshift #2 shaft (AX/4)	83506048
	Gearshift #2 shaft (AX/5)	83506047
69.	Gasket	83500521
70.	Bolt (XJ only)	83500525
71.	Boot	83500520
72.	Bushing	83500519
73.	Bearing and seal kit (prior to 1987)	BK-AX5E (NP)
74.	Bearing and seal kit (1988-up)	BK-AX5L (NP)

© 2003 Projekt 4x4

T4 TRANSMISSION

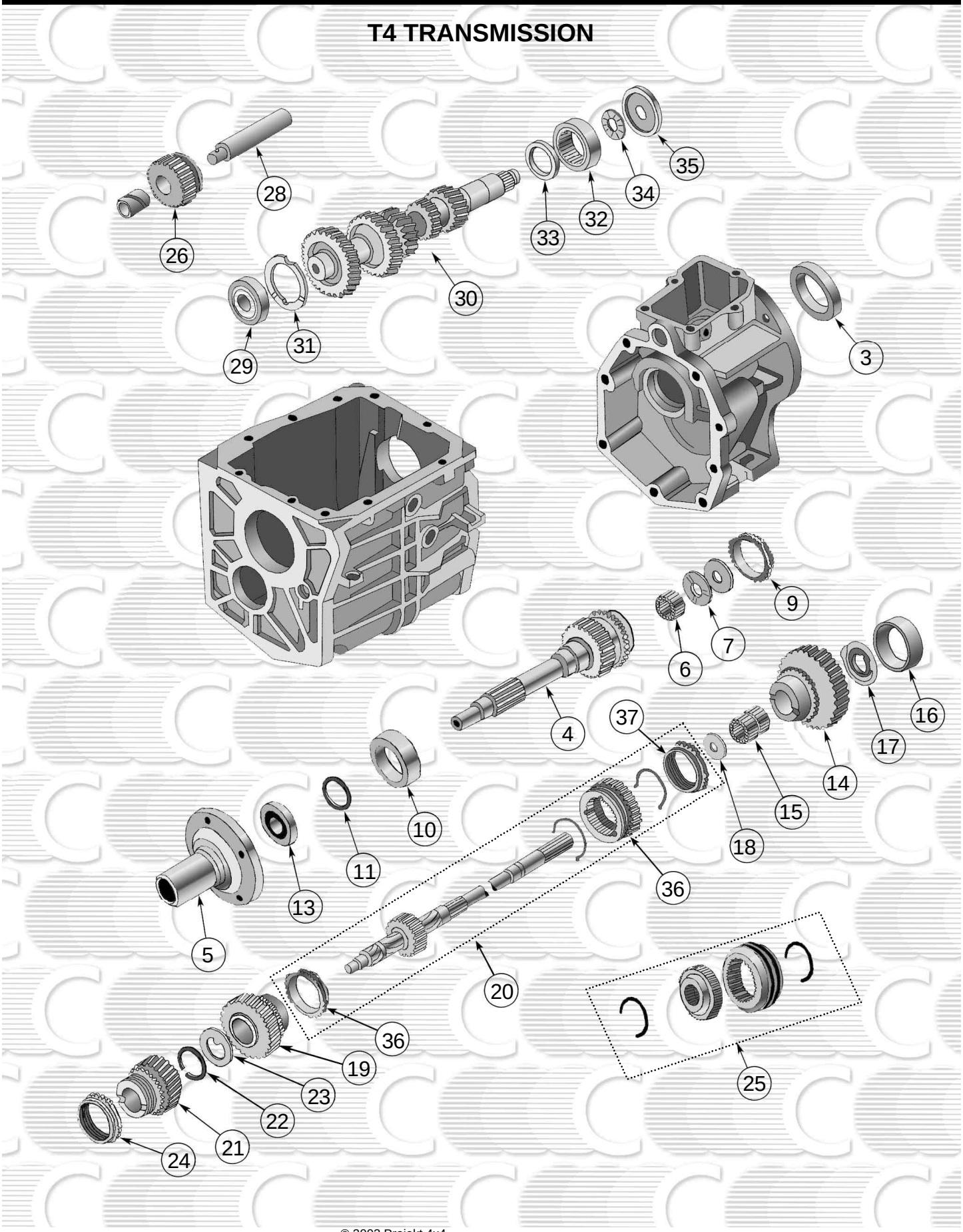

© 2003 Projekt 4x4

T4 TRANSMISSION:

NO.	DESCRIPTION	REPLACES PART#
3.	Adapter seal	8132672
4.	Input shaft (10 spline)	83500975
	Input shaft (14 spline)	83500968
5.	Retainer	8134013
6.	Roller bearing	8127397
7.	Thrust bearing	8134018
9.	Blocking ring set	8134058
10.	Bearing, Input	8134015
11.	Shim set	8134016
13.	Seal, Input	8132779
14.	1st gear	83501103
15.	Bearing	83500969
16.	Bearing, output	8134030
17.	Thrust washer	83500964
19.	2nd gear	8134024
20.	Mainshaft assy.	83501166
21.	3rd gear (29 teeth)	8134026
	3rd gear (27 teeth)	83500380
22.	Snap ring	8127424
23.	Thrust washer	8134025
24.	Blocking ring set	8134058
25.	3rd & 4th synchronizer assy.	8134027
26.	Reverse gear	8134038
28.	Shaft	8134039
29.	Bearing	8134033
30.	Cluster gear (37-32 teeth)w/27 tooth 3rd gear	83500970
31.	Thrust washer	8134032
32.	Bearing	8134036
33.	Spacer	8134035
34.	Bearing	8134034
35.	Thrust washer race	8134037
36.	1st and Reverse slider	1351-070-002
37.	1st and 2nd synchronizer ring set	8127403
38.	Small Parts kit	T4-50 (NP)

© 2003 Projekt 4x4

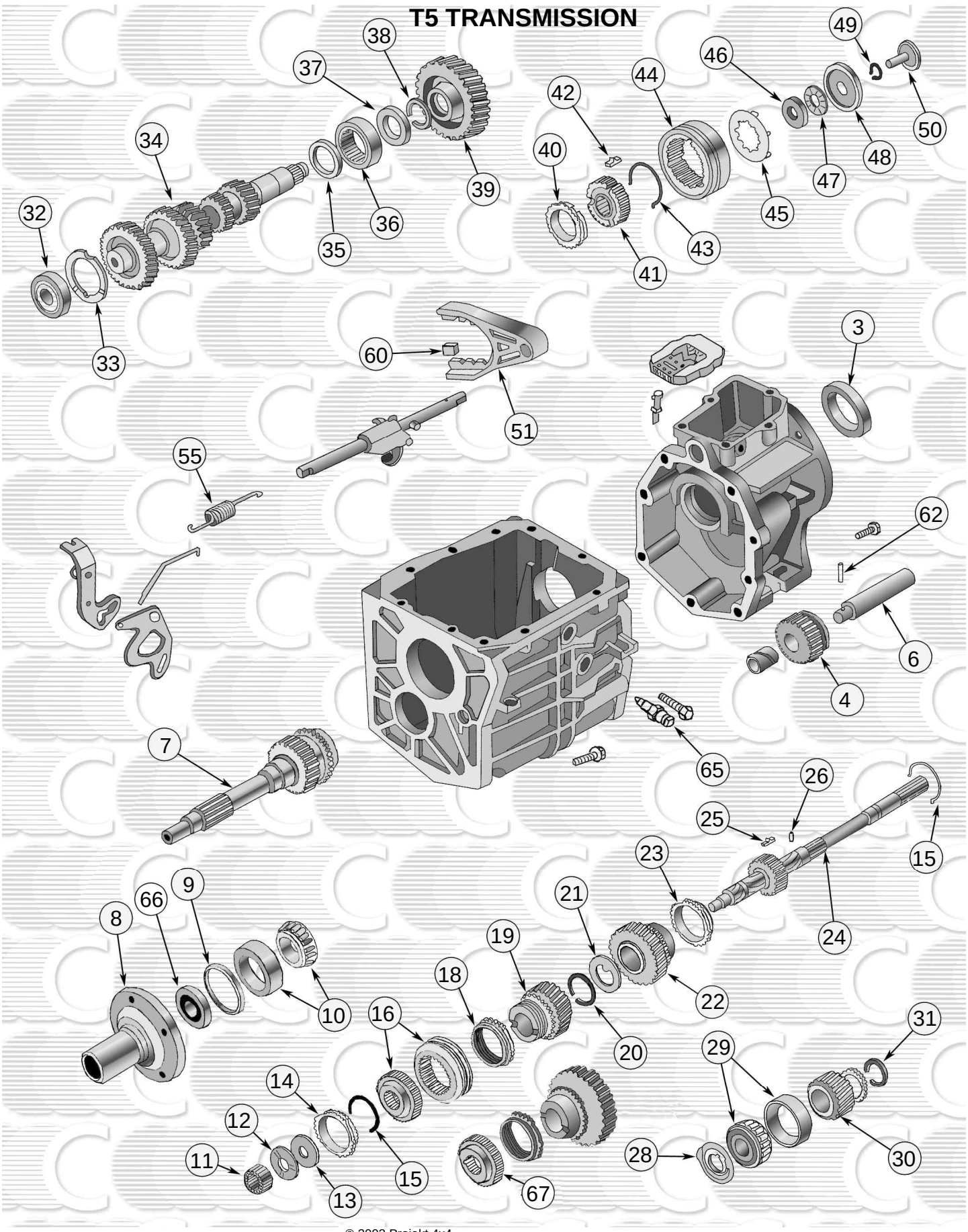

© 2003 Projekt 4x4

T5 TRANSMISSION:

NO.	DESCRIPTION	REPLACES PART#
3.	Adapter seal	8132672
4.	Reverse idler gear	8134038
6.	Reverse idler shaft	8134039
7.	Input shaft	83500975
	Input shaft (14 spline)	83500968
8.	Retainer	8134013
9.	Shim Kit	8134016
10.	Input shaft bearing	8134015
11.	Roller bearing	8127397
12.	Thrust bearing	8134018
13.	Thrust race	8134017
14.	3rd & 4th Synchronizer ring set	8134058
15.	Synchronizer spring	8134021
16.	3rd & 4th Synchronizer assy.	8134027
17.	Synchronizer plate	8127418 (NP)
18.	Ring set	8134058
19.	3rd speed gear (29 teeth)	8134026
	3rd speed gear (27 teeth)	83500380
20.	Snap ring	8127424
21.	Thrust washer	8134025
22.	2nd speed gear	8134024
23.	1st & 2nd synchronizer ring set	8127403
24.	Mainshaft Assy.	83501166
25.	Synchronizer plate	8127401
26.	Pin (1/8”-3/8”)	8127427
27.	1st speed gear	83501103
28.	Thrust washer	8134023
29.	Rear bearing	8134030
30.	5th speed driven gear	8134080
	5th speed driven gear (14 spline)	8134081
31.	Snap ring	8134082
32.	Roller bearing	8134071
33.	Thrust washerw/ 27 tooth 3rd gear	8134070
	Thrust washerw/ 29 tooth 3rd gear	8134069
34.	Cluster gear (8134069 used w/29 tooth 3rd gear)	83500967
35.	Spacer	8134035
36.	Roller bearing	8134036
37.	Spacer	8134072
38.	Snap ring	8134073
39.	5th speed gear	8134083
	5th speed gear (14 spline)	8134084
40.	5th speed ring	8127415
41.	5th synchronizer assy.	8134086
42.	Synchronizer plate	8127418

© 2003 Projekt 4x4

43.	Synchronizer spring	8127419
44.	5th speed clutch assy.	8134086
45.	Strut retainer	8134087
46.	Thrust race	8134088
47.	Thrust bearing	8134034
48.	Thrust race	8134037
49.	Snap ring	8134089
50.	Funnel	8134090
51.	5th speed fork	8134085
52.	Pin (3/16″ x1″)	8134040
55.	Reverse lock spring	8134076
60.	Insert	8133418
62.	Pin (3/16″x1″)	8134040
65.	Backup light switch	8134068
66.	Front retainer seal	8132779
68.	Small parts kit	T5-50 (NP)

© 2003 Projekt 4x4

SR4 TRANSMISSION

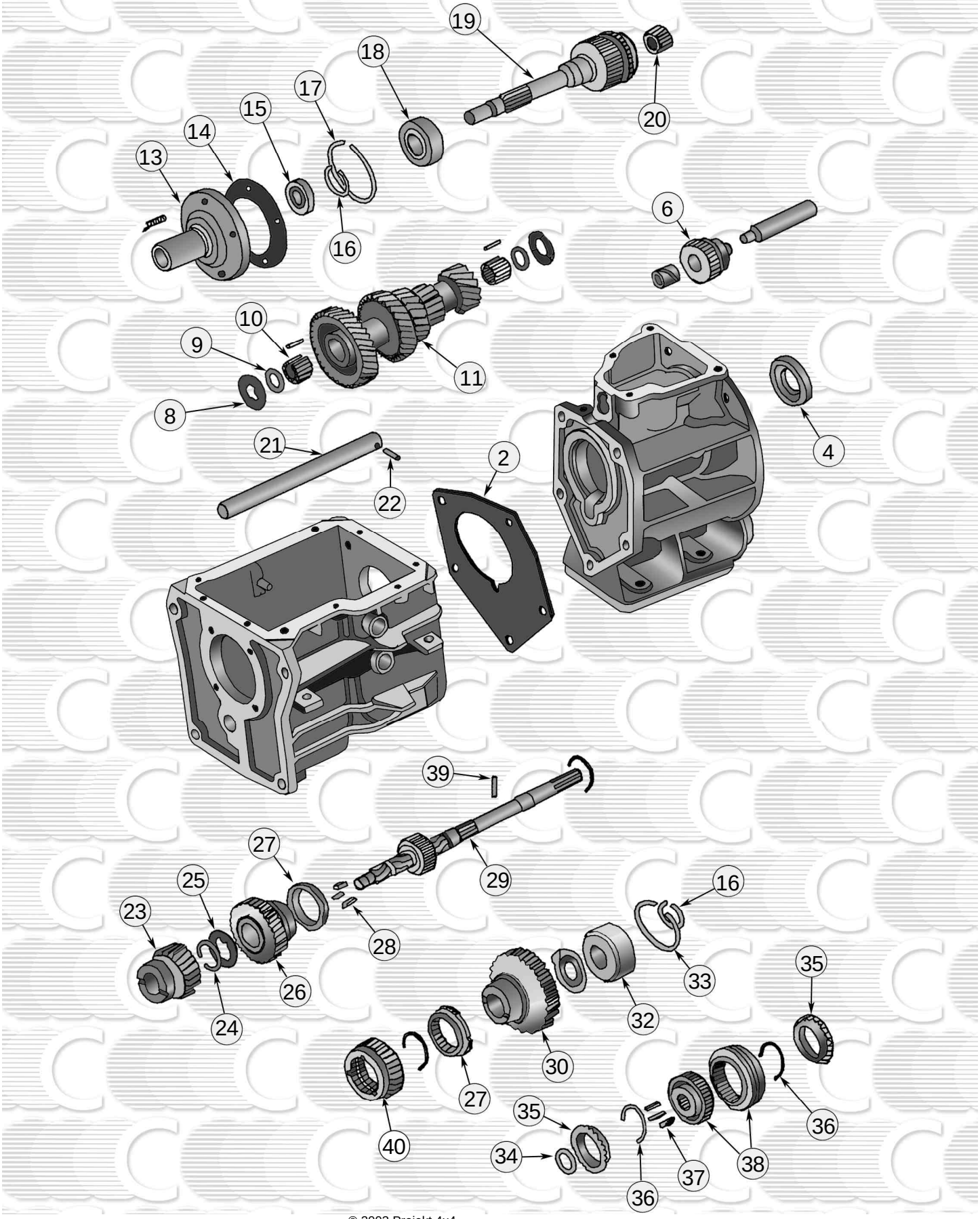

© 2003 Projekt 4x4

SR4 TRANSMISSION:

NO.	DESCRIPTION	REPLACES PART#
2.	Adapter gasket	8127385
4.	Adapter seal	8132672
6.	Reverse idler gear	8134230
8.	Thrust washer	8127432
9.	Flat washer	8127429
10.	Cluster gear roller	8127430
11.	Cluster gear (4 cyl.)	8132662
	Cluster gear (6 cyl.)	8127428
13.	Front bearing retainer	8127389
14.	Retainer gasket	8127392
15.	Main drive gear seal (4 cyl.)	8133528
	Main drive gear seal (6 cyl.)	8127391
16.	Bearing snap ring	8127398
17.	Bearing retaining ring	8127395
18.	Main drive gear bearing	8127394
19.	Main drive gear (4 cyl.)	8132596
	Main drive gear (6 cyl.)	8132597
20.	Main drive roller	8127397
21.	Counter shaft	8127433
22.	Roll pin	8127434
23.	3rd gear (4 cyl.)	8132674
	3rd gear (6 cyl.)	8127421
24.	2nd gear snap ring	8127424
25.	2nd gear washer	8127423
26.	2nd gear (4 cyl.)	8132675
	2nd gear (6 cyl.)	8127422
27.	Blocking ring set	8127403
28.	1st & 2nd gear plate	8127401
29.	Main shaft assy.	8133855
30.	1st gear	8127425
32.	Rear bearing	8127407
33.	Rear bearing retaining ring	8127395
34.	3rd & 4th snap ring	8127420
35.	3rd & 4th blocking ring set	8127415
36.	Synchronizer spring	8127400
37.	Synchronizer plate	8127418
38.	3rd & 4th synchronizer	8127416
39.	Pin	8127427
40	1st and reverse slider (included w/ mainshaft #29)	8127406
41.	Gasket and seal kit	SR4-GS (NP)
42.	Small parts kit	SR4-50 (NP)

© 2003 Projekt 4x4

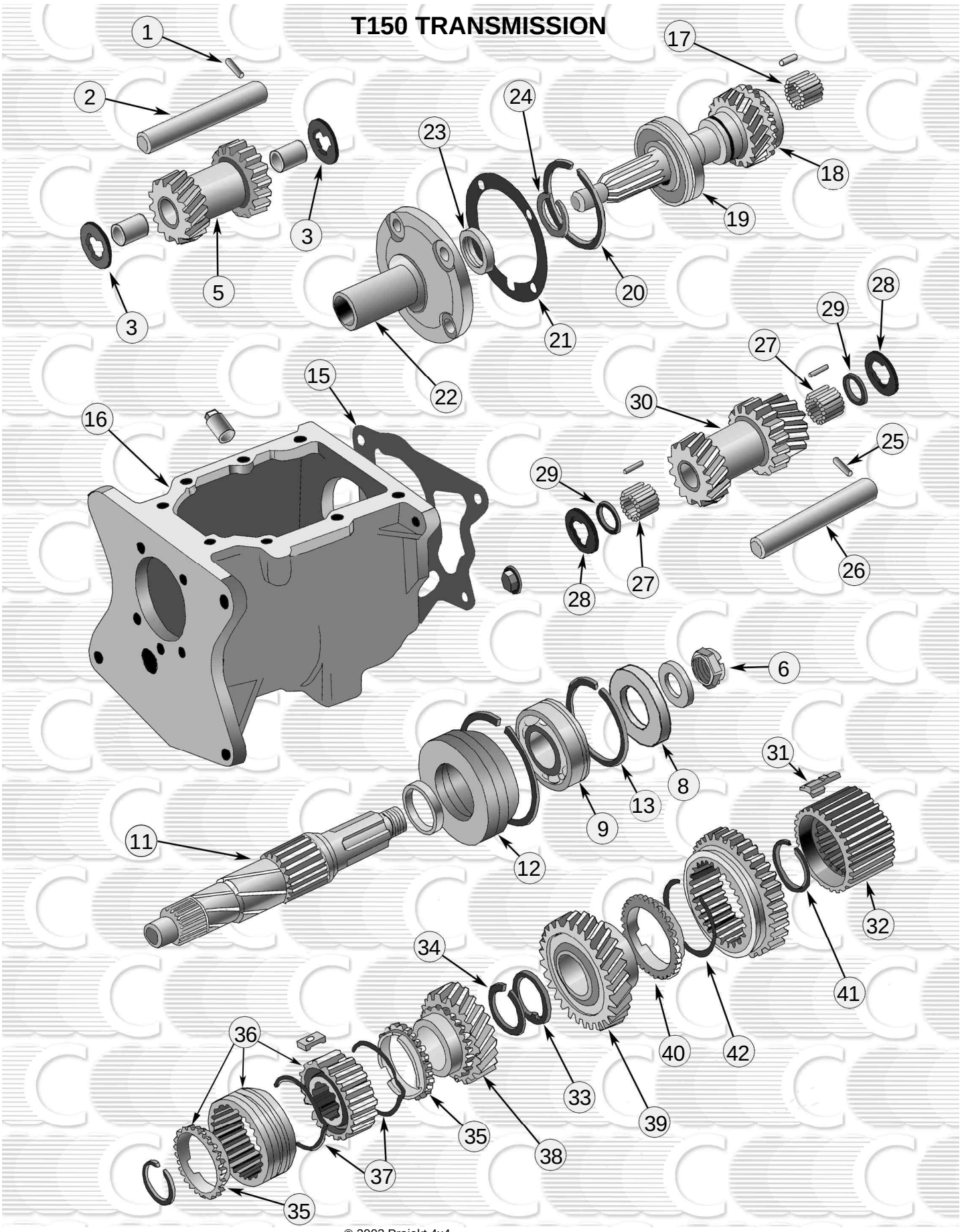

© 2003 Projekt 4x4

T150 TRANSMISSION:

NO.	DESCRIPTION	REPLACES PART #
1.	Reverse idler gear pin	8124932
2.	Reverse idler gear shaft	8124912
3.	Reverse idler washer	8124915
5.	Reverse idler gear	8124913
6.	Main shaft nut	940970
8.	Adapter plate seal	938031
9.	Rear bearing	8126834
11.	Main shaft spline	8126804
12.	Rear bearing adapter	8128879
13.	Rear bearing retaining ring	8126813
15.	Gasket	936615
16.	Transmission case spacer	8126808
17.	Roller bearing	8124929
18.	Main drive gear clutch shaft	8126106
19.	Front bearing	8124933
20.	Front lock ring	8124882
21.	Front bearing cap gasket	8124853
22.	Front bearing cap	8124880
23.	Front oil seal	8127391
24.	Front snap ring	8124883
25.	Countershaft pin	8124931
26.	Cluster gear countershaft	8124911
27.	Roller bearings	8124908
28.	Countershaft thrust washer	8124909
29.	Countershaft washer	8124910
30.	Cluster gear	8124907
31.	Low & reverse plate	8124904
32.	Low & reverse synchronizer assy. (Incl#31,#32qnd #40)	8126234
33.	Low gear thrust washer	8124936
34.	Low & high snap ring	8124935
35.	2nd & high friction rings	8124898
36.	2nd & high synchronizer assy. (Incl #35)	8126235
37.	2nd & high retaining spring	8124896
38.	2nd gear	8124899
39.	Low gear	8124902
40.	Low & reverse friction ring	8124906
41.	Low & reverse snap ring	8124934
42.	Low & reverse retaining spring	8124905
43.	Small parts kit	8124939 (NP)
44.	Snap ring kit	8127216 (NP)
45.	Gasket and seal kit	8127215 (NP)
46.	Small parts kit	T150-50 (NP)

© 2003 Projekt 4x4

T-176, T-177 TRANSMISSION

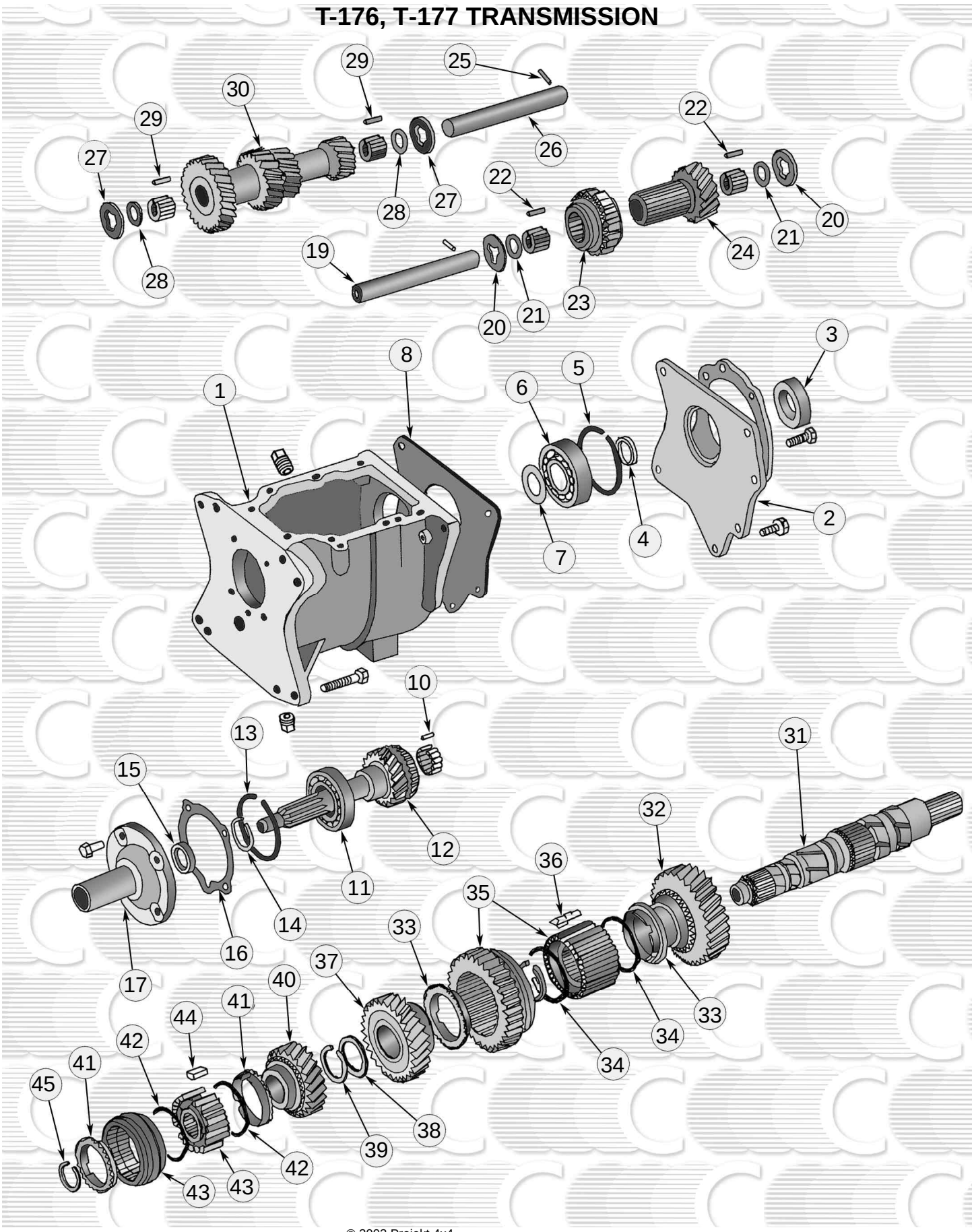

© 2003 Projekt 4x4

T-176, T-177 TRANSMISSION:

NO.	DESCRIPTION	REPLACES PART #
1.	Transmission case	8132375
3.	Adapter oil seal	5359457
4.	Snap ring	8124883
5.	Rear bearing lock ring	8132430
6.	Rear bearing	8132431
7.	Thrust washer	8132390
8.	Adapter gasket	5359411
10.	Roller bearing	8124929
11.	Front bearing	8132426
12.	Main Drive Gear (Clutch Shaft)	8132369
	Clutch shaft (T-177)	8132401
13.	Front bearing lock ring	8132425
14.	Snap ring	8132427
15.	Oil seal , Input	8124881
16.	Bearing cap gasket	8132423
17.	Front bearing cap	8132372
19.	Reverse idler shaft	8132398
20.	Thrust washer	8132405
21.	Flat washer	8132404
22.	Roller bearing	8132403
23.	Reverse sliding gear	8132402
24.	Reverse idler gear	8132399
25.	Shaft pin	8124931
26.	Counter shaft	8132397
27.	Thrust washer	8132396
28.	Flat washer	8132395
29.	Roller bearing	8132394
30.	Countershaft gear (T-177)	8132393
31.	Spline shaft	8132374
32.	1st gear	8132389
33.	1st & 2nd synchronizer ring set	8132378
34.	1st & 2nd synchronizer spring	8132377
35.	1st & 2nd synchronizer	8132386
36.	1st & 2nd synchronizer plate	8132387
37.	2nd gear (T-176)	8132382
	2nd gear (T-177)	8132384
38.	2nd gear washer	8124936
39.	Snap ring	8132385
40.	3rd gear (T-176)	8132379
	3rd gear (T-177)	8132429
41.	3rd & 4th synchronizer ring set	8132378
42.	3rd & 4th synchronizer spring	8132377
43.	3rd & 4th synchronizer	8132376
44.	3rd & 4th synchronizer plate	8124895
45.	Snap ring	8124930
51.	Small parts kit	SP170-50
52.	Gasket & seal kit	T170-GS

© 2003 Projekt 4x4

Transmission

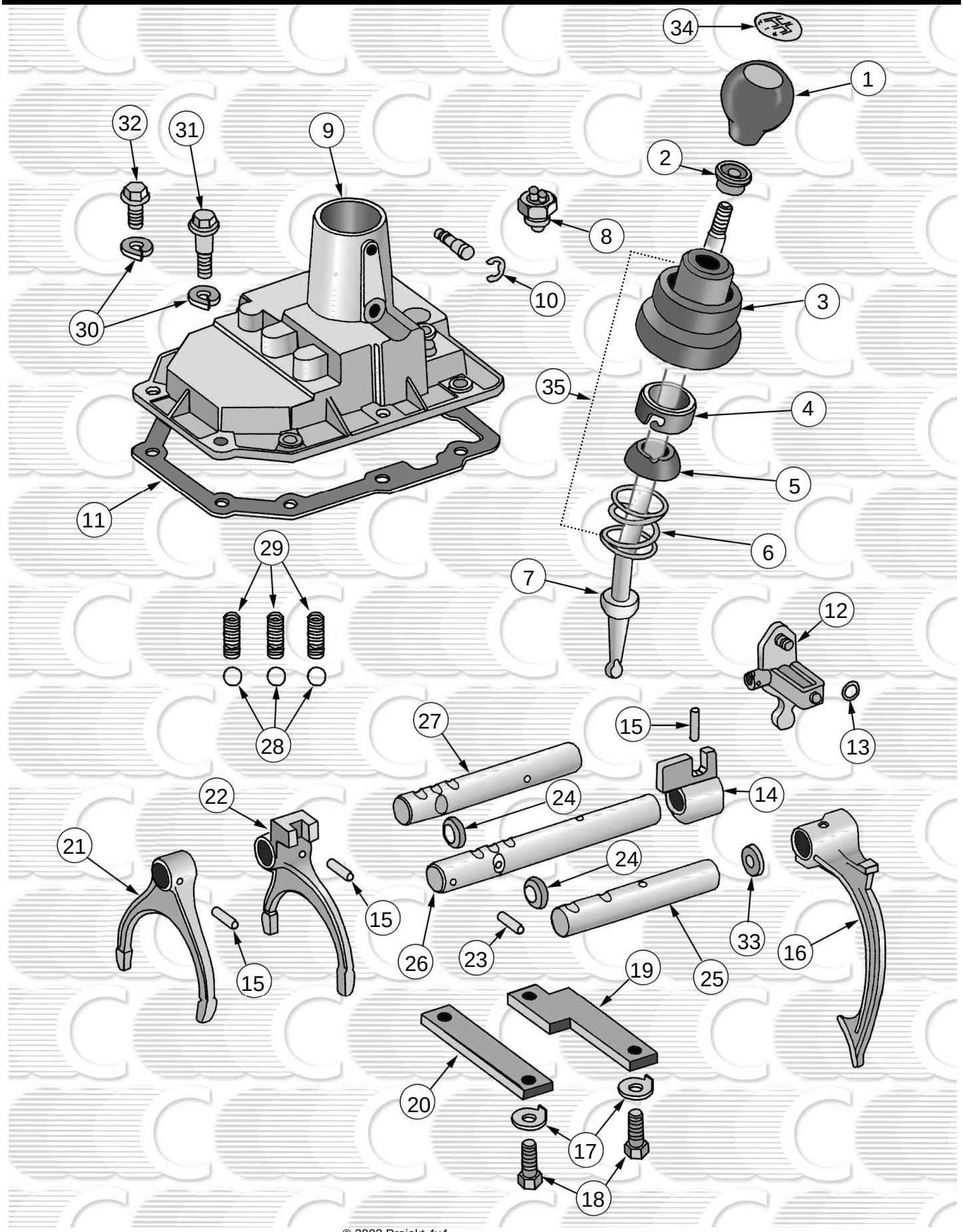

© 2003 Projekt 4x4

Transmission Assembly

1.	Knob	5361405
	KnobShift Lever	3241062
2.	Nut Special	4006495
3.	Boot	8132422
4.	Cap, housing	8132421
5.	Cap, Spring	8132420
6.	Spring, Shift lever	8127059
7.	Lever, Shift (LHD)	5359835
	Lever, Shift (RHD-six)	5360078
	Lever, Shift (Diesel)	5360078
	Lever, Shift (RHD-four)	5360079
	Lever, Shift (10 RHD)	8051176
8.	Switch	5751207
9.	Cover, Control	8133231
10.	E-Clip Reverse Rocker Arm	8132900
11.	Gasket, Cover	8132428
12.	Arm Assembly, Reverse Rocker	8132815
13.	O Ring	8132829
14.	Lug, 3rd and 4th Shift Fork	8132421
15.	Pin, Shift Fork Retaining	8132897
16.	Fork, Reverse Shift	8132413
17.	Lock, Screw	8132418
18.	Screw, PLate	8132417
19.	Plate, Shift Rail Support (rear)	8132416
20.	Plate, Shift Rail Support (front)	8132415
21.	Fork, 3rd and 4th Shift	8132412
22.	Fork, 1st and 2nd shift	8132411
23.	Pin, Interlock	8132419
24.	Ring, Interlock	8132371
25.	Rail, Reverse Shift	8132410
26.	Rail, 3rd and 4th Shift	8132409
27.	Rail, 1st and 2nd shift	8132408
28.	Ball, Interlock	8126829
29.	Spring, Interlock	8126828
30.	Washer, Lock	4003803
31.	Bolt, Shoulder	8134335
32.	Bolt, Hexagon	8126815
33.	Spacer	8134403
34.	Insert, Shift Knob	3241428

© 2003 Projekt 4x4

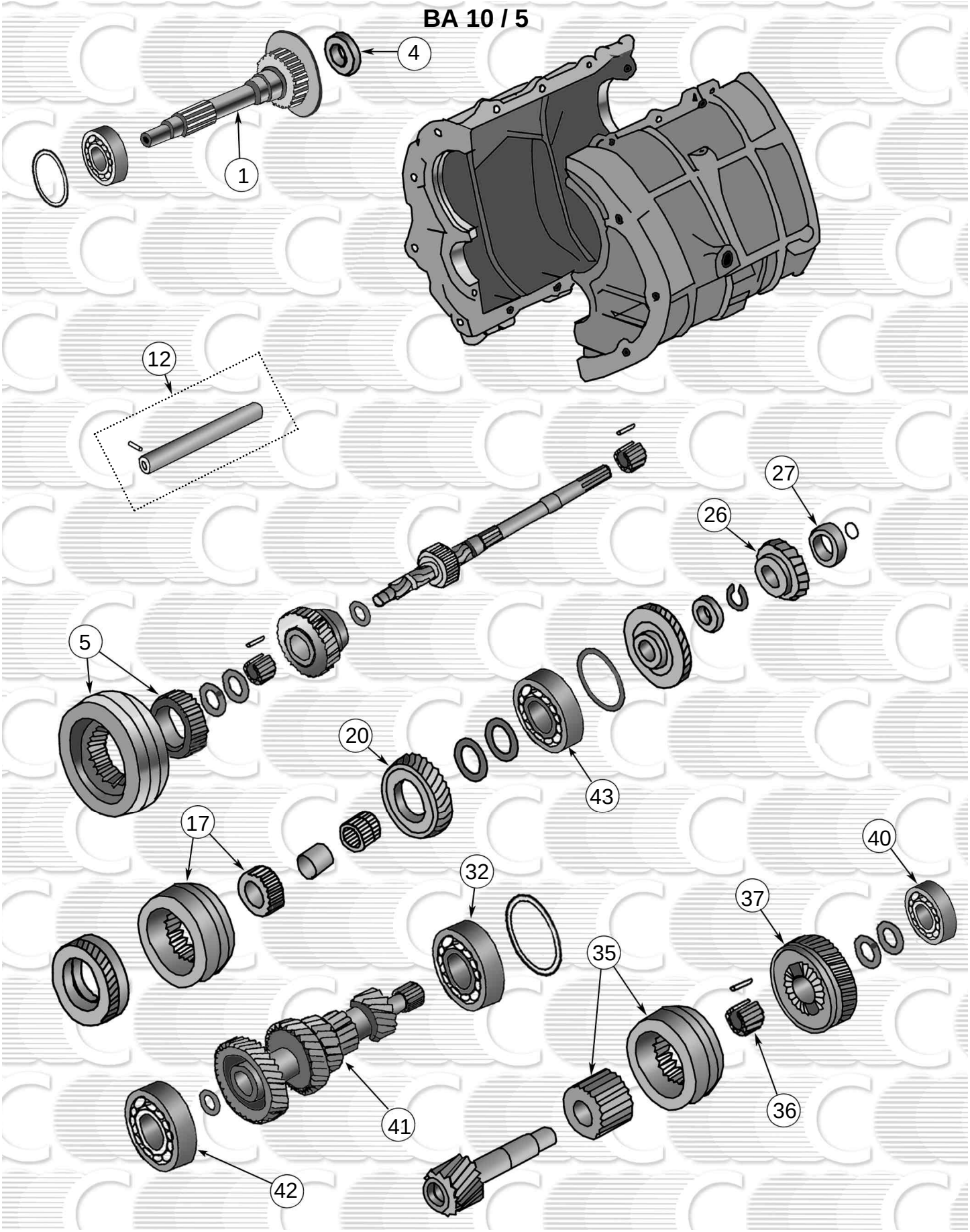

© 2003 Projekt 4x4

BA 10 / 5

NO.	DESCRIPTION	REPLACES PART #
1.	Main drive gear	83505205
4.	Bearing, Input	83504410
5.	3rd & 4th gear synchronizer	83504103
12.	Reverse / idler gear kit	83504500
17.	1st & 2nd gear synchronizer	83504089
20.	1st gear (32 teeth)	83505444
26.	5th gear (27 teeth)	83504099
27.	Bearing	83503249
32.	Bearing	83505448
35.	5th gear synchronizer	83503246
36.	Bearing	83503207
37.	5th intermediate gear (28 teeth)	83505451
40.	Bearing	83503201
41.	Cluster gear	83505445
42.	Bearing	83503209
43.	Main drive gear bearing (aft. tag # 131162)	83505447
44.	Front oil seal	83503234 (NP)
45.	Rear oil seal	83503250 (NP)
46.	Bearing and seal kit	BK-BA10 (NP)

© 2003 Projekt 4x4

Transfer Case

Transfer Case 13-1

Model 300 13-3
NP 242 13-5
NP 231 13-7
NP 208 13-9
NP 228 / 229 13-11
NP 219 13-15

Back

© 2003 Projekt 4x4

Transfer Case

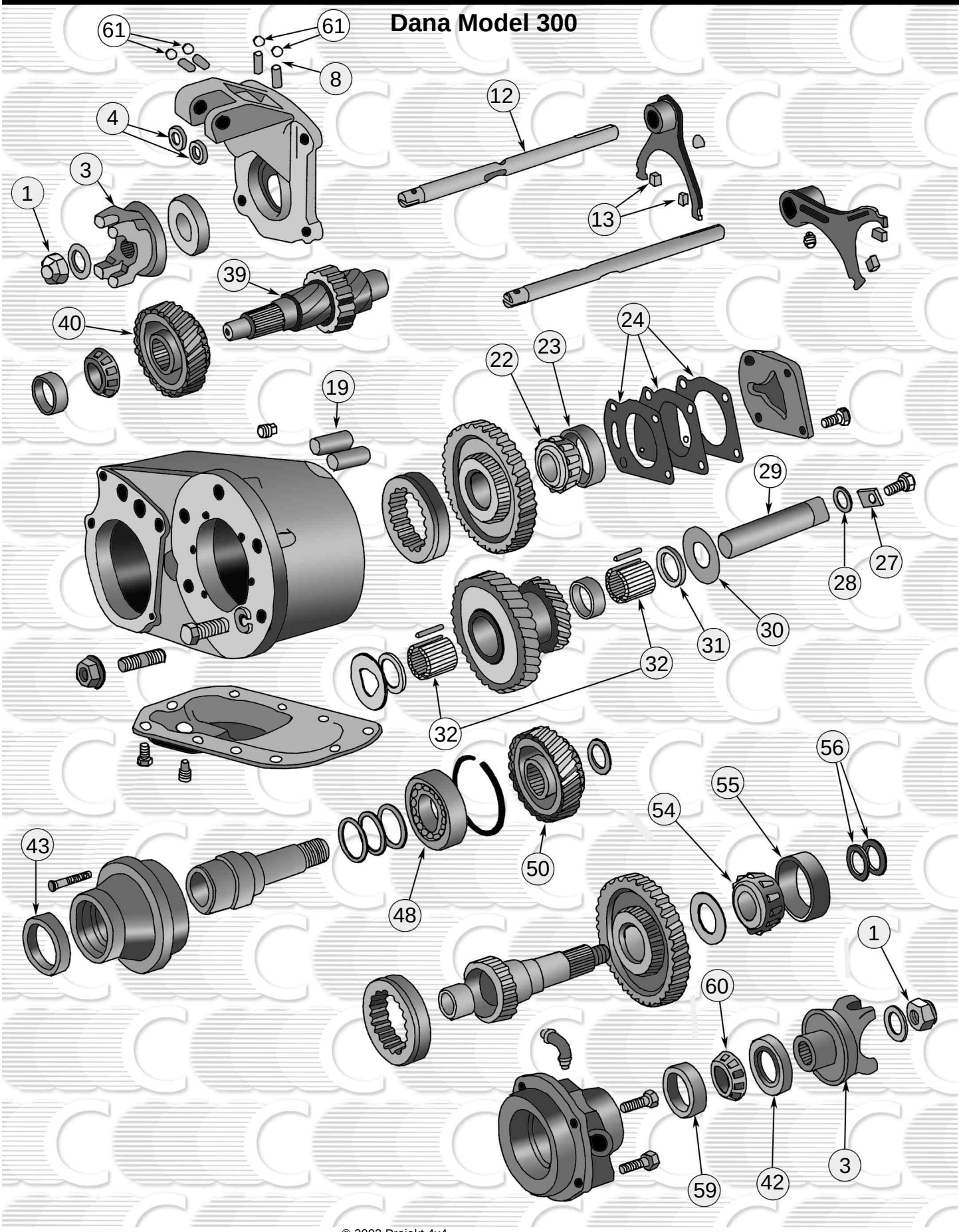

© 2003 Projekt 4x4

Dana Model 300:

NO.	DESCRIPTION	REPLACES PART #
1.	Output shaft nut	801367
3.	Output Yoke	8131656
4.	Shift Road oil seal	8131674
8.	Shift rod poppet spring	8131676
12.	Shift rod	8131673
13.	Shift fork clip	8131670
19.	Shift fork rod thimble	934281
22.	Bearing cone	3156063
23.	Bearing cup	3156062
24.	Shim & gasket kit	D300-GS
27.	Lock plate	A1001
28.	Intermediate shaft seal	942114
29.	Intermediate shaft	942115
30.	Thrust washer	8121813
31.	Intermediate bearing spacer	809295
32.	Needle bearing	809294
39.	Front output shaft	8131660
40.	Front output gear	8131680
42.	Oil seal	8131669
43.	Input oil seal	8131684
48.	Input bearing	8131682
50.	Input gear	8131685
54.	Rear output inner bearing cone	52799
55.	Rear output inner bearing cup	52800
56.	Rear output bearing shim kit	933743
59.	Rear output bearing outer cup	3124570
60.	Rear output bearing outer cone	933737
61.	Ball	453593
62.	Small parts kit	935758

© 2003 Projekt 4x4

Transfer Case

NP 242

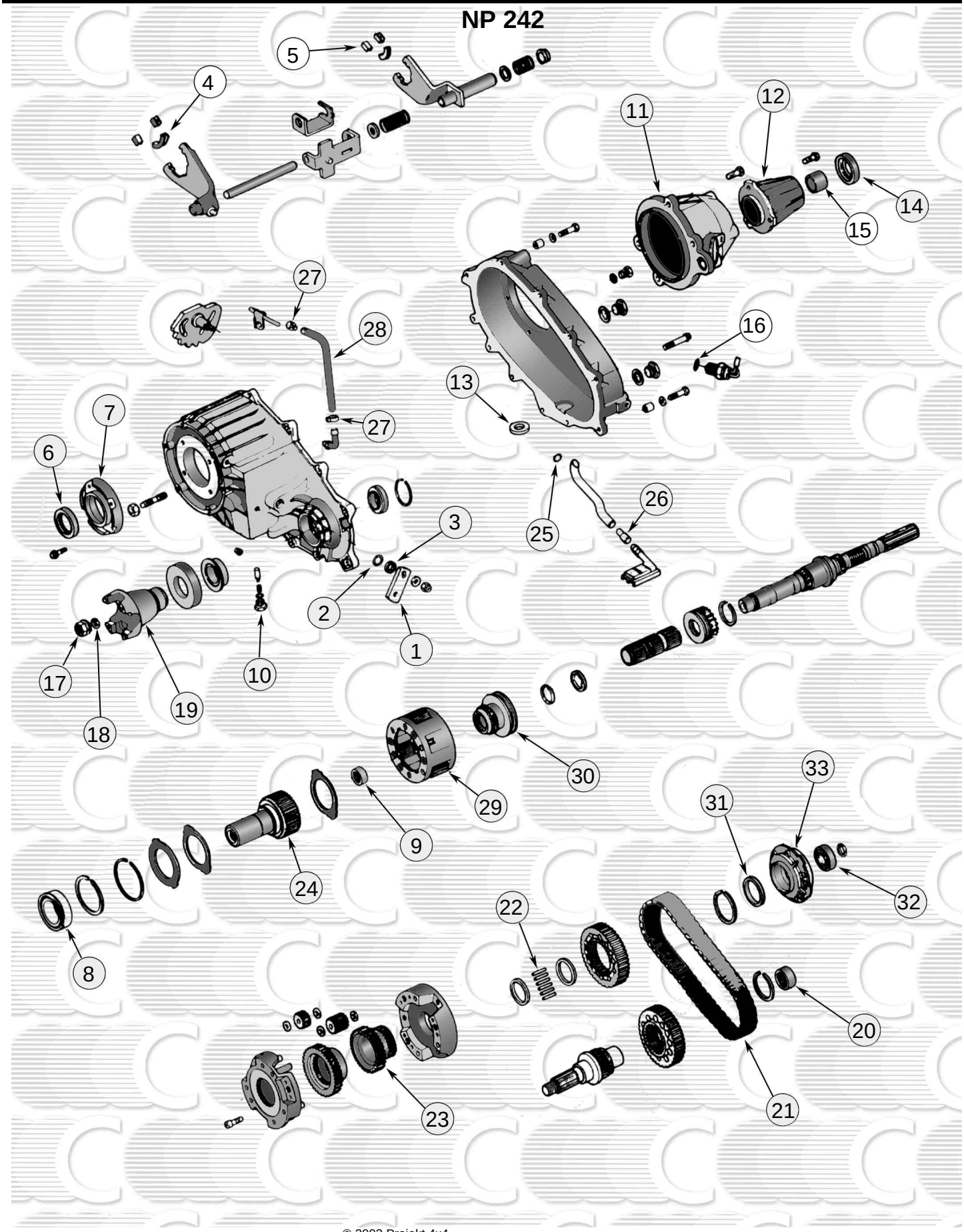

© 2003 Projekt 4x4

NP 242

NO.	DESCRIPTION	REPLACES PART #
1.	Grommet	53004810
2.	O-Ring	4167963
3.	Retaining Ring, Shift Lever	4167964
4.	Pad Kit, Shift Fork (Outer)	4167969
	Pad Kit, Shift Fork (Center)	4167970
5.	Pad Kit, Shift Fork (Outer)	4167969
	Pad Kit, Shift fork (Center)	4338376
6.	Seal, Front Retainer	4167929
7.	Retainer	4338973
8.	Input Ball Bearing	4746155
9.	Input Needle Pilot Bearing	83503507
10.	Seal	4167963
11.	Retainer	83503524
	Retainer	4638955
12.	Extension	83503156
13.	Magnet	3681601
14.	Seal, Rear Output	4638904
	Seal, Rear Output	4798117
15.	Bushing	8134490
16.	Seal	4338956
17.	Nut	4167924
18.	Washer	4210973
19.	Yoke, Front Transfer Case	4856142
20.	Bearing	4269189
21.	Chain	83504575
	Chain	4638890
22.	Roller Set	83503543
23.	Sprocket	83503530
24.	Input Gear	4728163
	Input Gear	4796972
	Input Gear	4798126
25.	Seal	4338942
26.	Hose (1/4”)	4443175
27.	Clamp	33000786
28.	Hose (5/16”)	4443176
29.	Planetary Gear	53006087
30.	Range Sleeve	53006090
31.	Seal	4210603
32.	Bearing, Front Output	4338892
33.	Oil Pump	4338936

© 2003 Projekt 4x4

NP 231

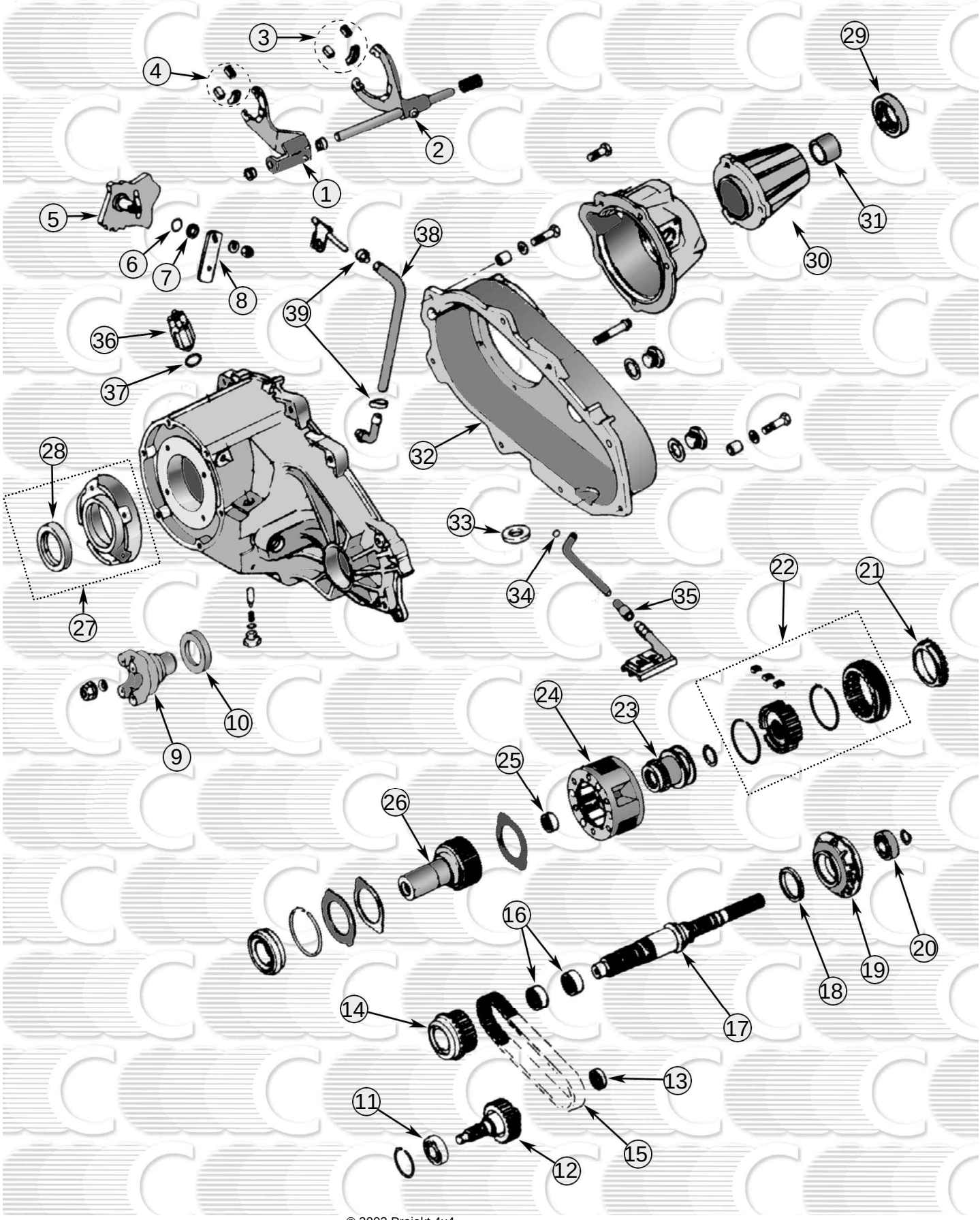

© 2003 Projekt 4x4

Transfer Case

NP 231

NO.	DESCRIPTION	REPLACES PART #
1.	Range Shift Fork	4638913
2.	Mode Shift Transfer Fork	4338920
3.	Center Pad	4219073
4.	Shift Fork Pad	4167969
5.	T.C. Shifting Sector	4638844
6.	Sector Seal O-Ring	4167963
7.	Sector Seal	4167964
8.	Grommet	53004810
9.	Front Output Shaft Yoke	4446494
	Front Output Shaft Yoke	83502829
	Front Output Shaft Yoke (XJ,ZG)	4798120
10.	Yoke Seal	4338893
	Yoke Seal	4798112
11.	Front Output Shaft Bearing	4338892
12.	Output Shaft	4338934
13.	Bearing	4269189
14.	Drive Sprocket	4741238
	Drive Sprocket	4796908
	Drive Sprocket	4796966
15.	Chain	4338935
16.	Sprocket Bearings	4269185
17.	Main Drive Shaft	83503141
18.	Oil Seal	4210603
19.	Oil Pump Housing	4338936
20.	Bearing	4338892
21.	Thrust Ring	4329526
22.	Mode Shift Synchronizer Assy.	4505361
23.	Range Shift Hub	530060893
	Range Shift Hub	4796906
24.	Planetary Gear	53006087
25.	Input Pilot Bearing	4338913
	Input Pilot Bearing	4746155
26.	Input Gear (27 Teeth)	53006083
	Input Gear (23 Teeth)	53006085
	Input Gear (23 Teeth)	83506065
	Input Gear (23 Teeth)	4761068
	Input Gear	4796956
	Input Gear	4796965
	Input Gear (XJ, ZG)	4798113
27.	Retainer	4338972
28.	Oil Seal	4167929
29.	Rear Seal, Transfer Case	4638904
	Rear Seal, Transfer Case	4798117
30.	Housing Extension, Rear Transfer Case	83503156
31.	Extension Bushing	8134490
32.	Rear Half Case	83503153
33.	Magnet	3681601
34.	O-Ring	4338942
35.	Hose	4443175
36.	Vacuum Switch	53001101
	Vacuum Switch	8134473
37.	O-Ring Seal	4338956
38.	Hose (5/16”)	4443176
39.	Clamp	33000786
40.	Complete install kit for NP 231	231-MASKIT (NP)

© 2003 Projekt 4x4

NP 208

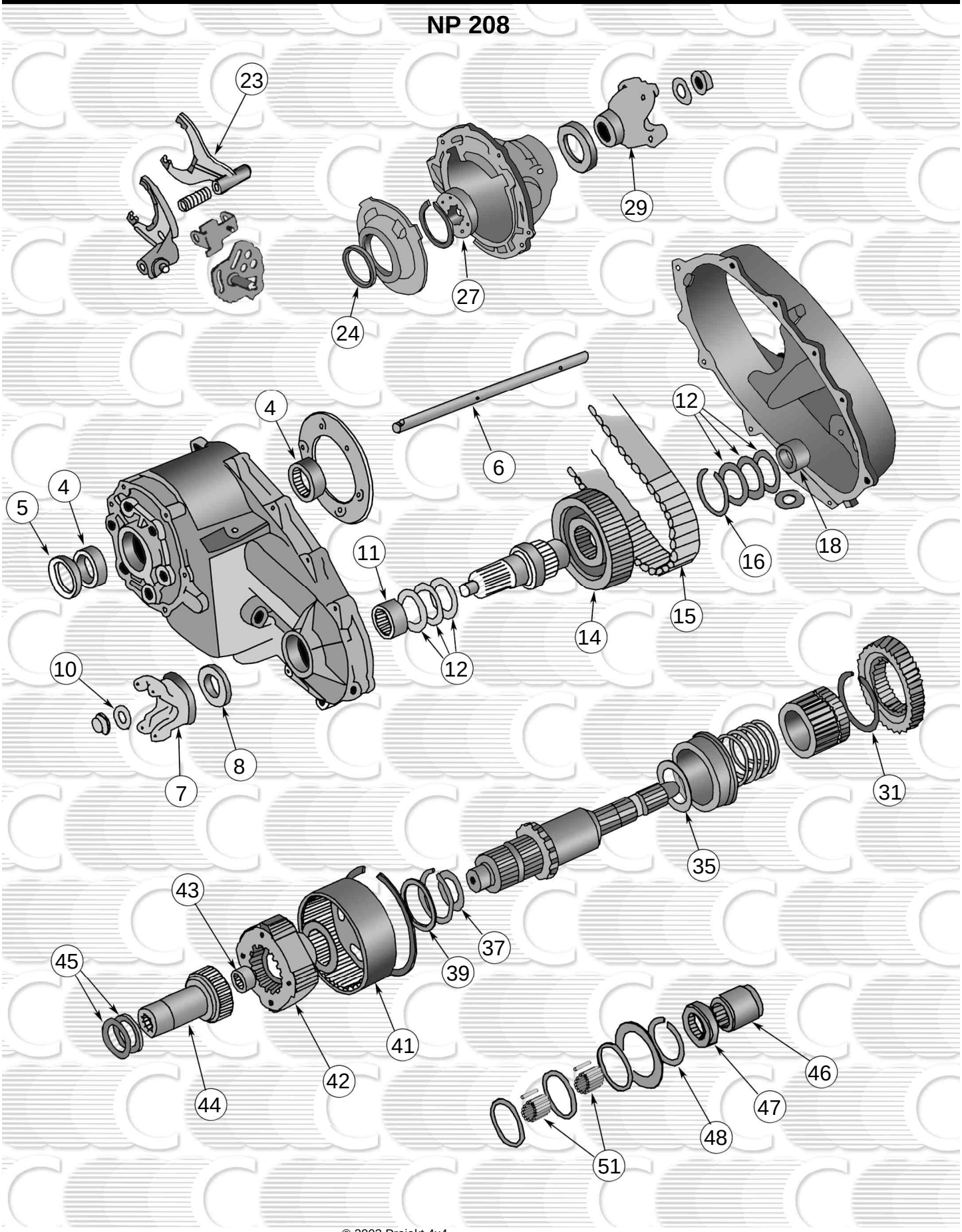

© 2003 Projekt 4x4

NP 208

NO.	DESCRIPTION	REPLACES PART #
4.	Input shaft bearing	8130868
5.	Input shaft oil seal	8130870
	Input shaft oil seal (1987-90)	5359457
6.	Shift rail	8130822
7.	Front output yoke	8130818
8.	Output oil seal	8130808
	Output oil seal(1987-90)	83505290
10.	Seal washer	8130815
11.	Front output shaft bearing	8130869
12.	Front output shaft bearing assy.	8130819
14.	Sprocket	8130975
15.	Chain	8130977
16.	Retaining ring	8130802
18.	Bearing	8130836
23.	fork	8130851
24.	Pump housing seal	8130982
27.	Rear output bearing	8130807
	Rear output bearing (1983-90)	8136626
29.	Rear yoke	8130817
	Rear yoke (1987-90)	83503578
31.	Sprocket stop ring	8130970
35.	Thrust washer	8130967
37.	Main shaft thrust bearing	8130879
39.	Thrust washer	8130865
41.	Annulus gear (1979-82)	8130864
42.	Planetary gear	8130862
43.	Input bearing	8130878
44.	Input gear	8130877
45.	Input thrust bearing kit (1979-82)	8130875
46.	Speedometer drive gear	8130827
47.	Oil pump	8130826
48.	Retaining ring	8130974
51.	Roller bearing	8130972

© 2003 Projekt 4x4

Transfer Case

NP 228 / 229

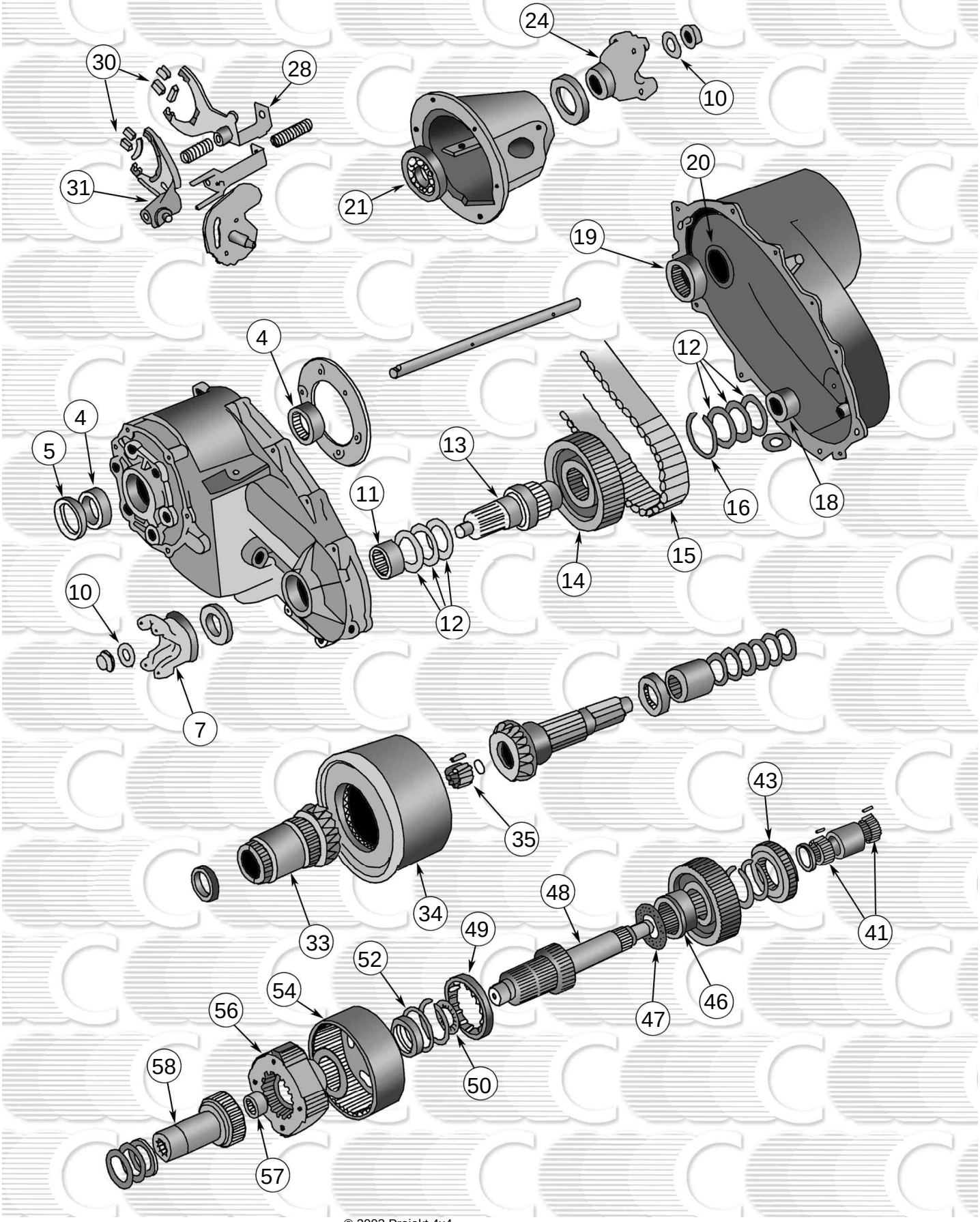

© 2003 Projekt 4x4

NP 228 / 229

NO.	DESCRIPTION	REPLACES PART #
4.	Input shaft bearing	8130868
5.	Input shaft oil seal (1982-86)	8130870
	Input shaft oil seal (1987-90)	5359457
7.	Front yoke (1982-86)	8134272
	Front yoke (1987-89)	83503586
	Front yoke (1990)	15286
10.	Seal	8130815
11.	Bearing (1981-89)	8130869
	Bearing (1990)	4269186
12.	Bearing assy. (1981-89)	8130819
	Bearing assy. (1990)	15127
13.	Front output shaft (1981-89)	8130850
14.	Sprocket	8130849
15.	Chain	8130831
16.	Retaining ring (1981-89)	8130802
	Retaining ring (1990)	4167891
17.	Magnet (1990)	3681601
18.	Front output rear bearing (1981-89)	8130836
	Front output rear bearing (1990)	4269183
19.	Output shaft inner bearing (1981-89)	8133644
	Output shaft inner bearing (1990)	15462
20.	Seal (1981-86)	8133643
	Seal (1987-90)	8130982
21.	Output bearing	8130807
24.	Rear yoke (1981-86)	8130817
	Rear yoke (1987-89)	83503578
	Rear yoke (1990)	13775
28.	Mode fork	8134275
30.	Pad kit (1981-89)	8134279
	Pad kit (1990)	15866
31.	Range fork (1981-89)	8134276
	Range fork (1990)	15618
33.	Side gear (1981-89)	8131608
	Side gear (1990)	13836
34.	Viscous coupling (1981-90)	8130800
35.	Roller bearing (1981-86)	8130804
41.	Roller bearing (1981-86)	8130846
	Roller bearing (1987-90)	83500288
43.	Viscous clutch gear (1981-89)	8130801
	Viscous clutch gear (1990)	13854
46.	Side clutch gear	8133633
47.	Main shaft thrust washer (1981-89)	8130844

© 2003 Projekt 4x4

48.	Main shaft (1981-89)	8134274
	Main shaft (1990)	15636
49.	Sleeve (1981-89)	83502516
	Sleeve (1990)	16111
49A.	Sleeve (1981-89)	83502611 (NP)
	Sleeve (1990)	16112 (NP)
50.	Thrust bearing (1981-89)	8130879
	Thrust bearing (1990)	4269182
52.	Thrust washer (1981-89)	8130865
	Thrust washer (1990)	4167959
54.	Annulus gear (1981-89)	8130864
	Annulus gear (1990)	4167954
56.	Planetary gear (1981-89)	83500383
	Planetary gear (1990)	4329198
57.	Input bearing (1981-89)	8130878
	Input bearing (1990)	4269187
58.	Input shaft (1981-89)	83500492
	Input shaft (1990)	15786

© 2003 Projekt 4x4

Transfer Case

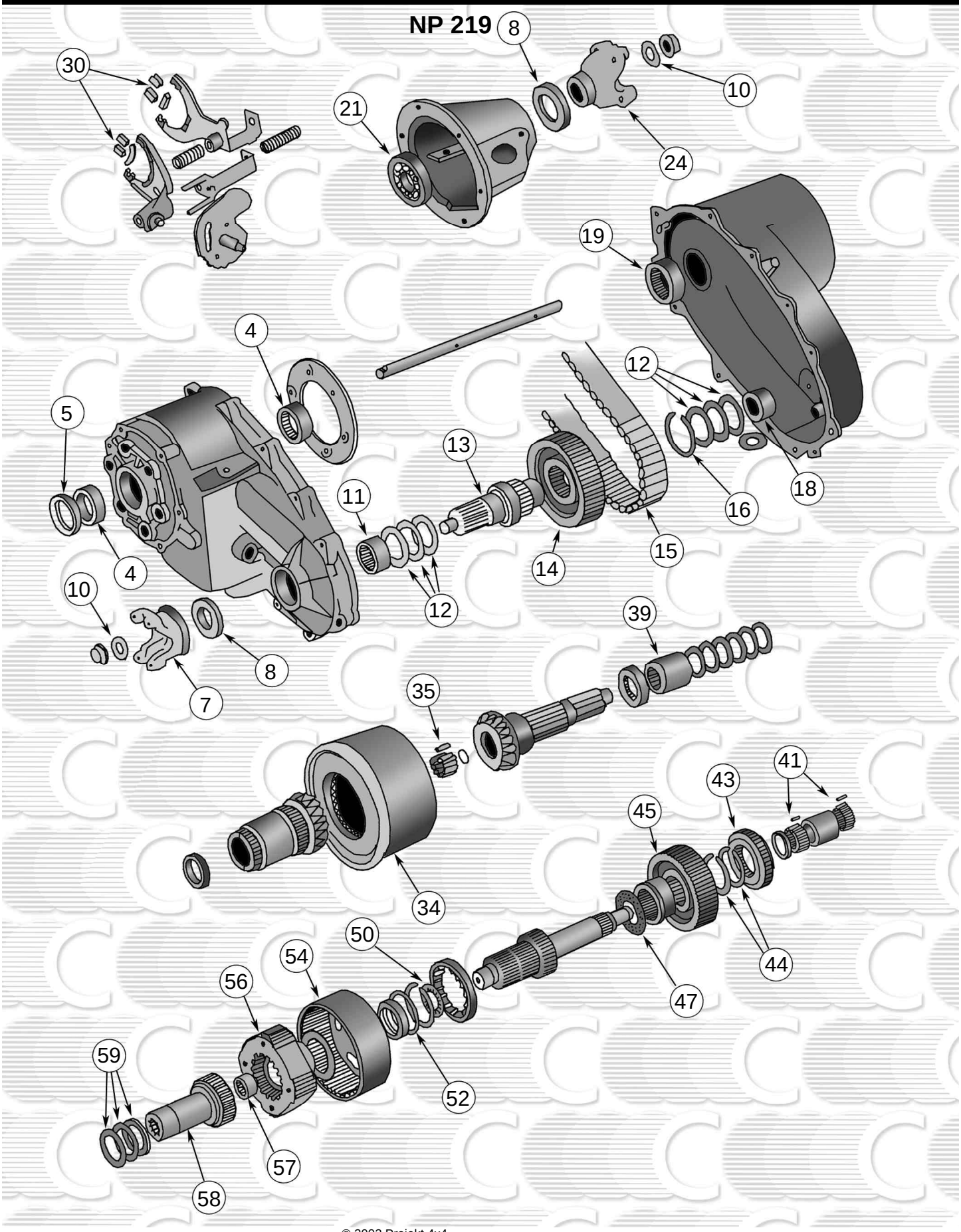

© 2003 Projekt 4x4

NP 219

NO.	DESCRIPTION	REPLACES PART #
4.	Input shaft bearing	8130868
5.	Input shaft oil seal	8130870
7.	Front output yoke	8130818
8.	Output oil seal	8130808
10.	Seal washer	8130815
11.	Front output shaft bearing	8130869
12.	Front output shaft bearing assy.	8130819
13.	Front output shaft	8130850
14.	Sprocket	8130849
15.	Chain	8130831
16.	Retaining ring	8130802
18.	Front output shaft rear bearing	8130836
19.	Rear output inner bearing	8130835
21.	Rear output outer bearing	8130807
24.	Rear yoke assy.	8130817
30.	Pad kit	8130859
34.	Viscous coupling	8130800
35.	Pilot bearing roller	8130804
39.	Speedometer drive gear	8130827
41.	Side gear roller	8130846
43.	Viscous clutch gear	8130801
44.	Retaining ring	8130802
45.	Sprocket	8130849
47.	Main shaft thrust washer	8130844
50.	Main shaft thrust bearing	8130879
52.	Thrust washer	8130865
54.	Annulus gear	8130864
56.	Planetary gear	8130862
57.	Input bearing	8130878
58.	Input gear	8130877
59.	Input thrust bearing kit	8130875

© 2003 Projekt 4x4

Engine

Engine 14-1

Engine Illustrations 14-2
Engine Index 14-4
2.5L 14-4
4.0L 14-6
4.2L 14-8
5.2L & 5.9 14-10
5.2L 14-12
Serpentine Belts 14-13

© 2003 Projekt 4x4

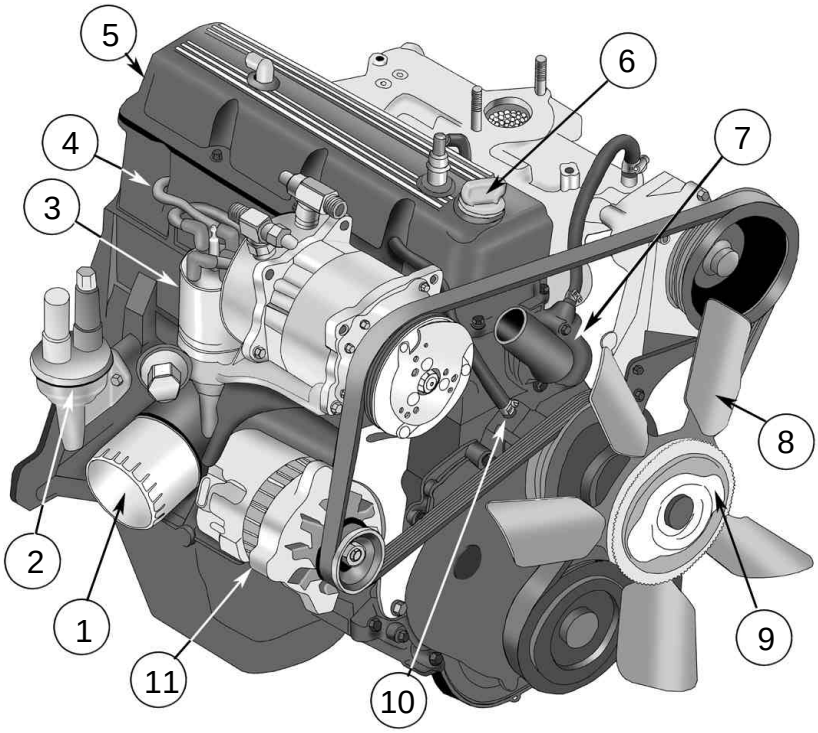

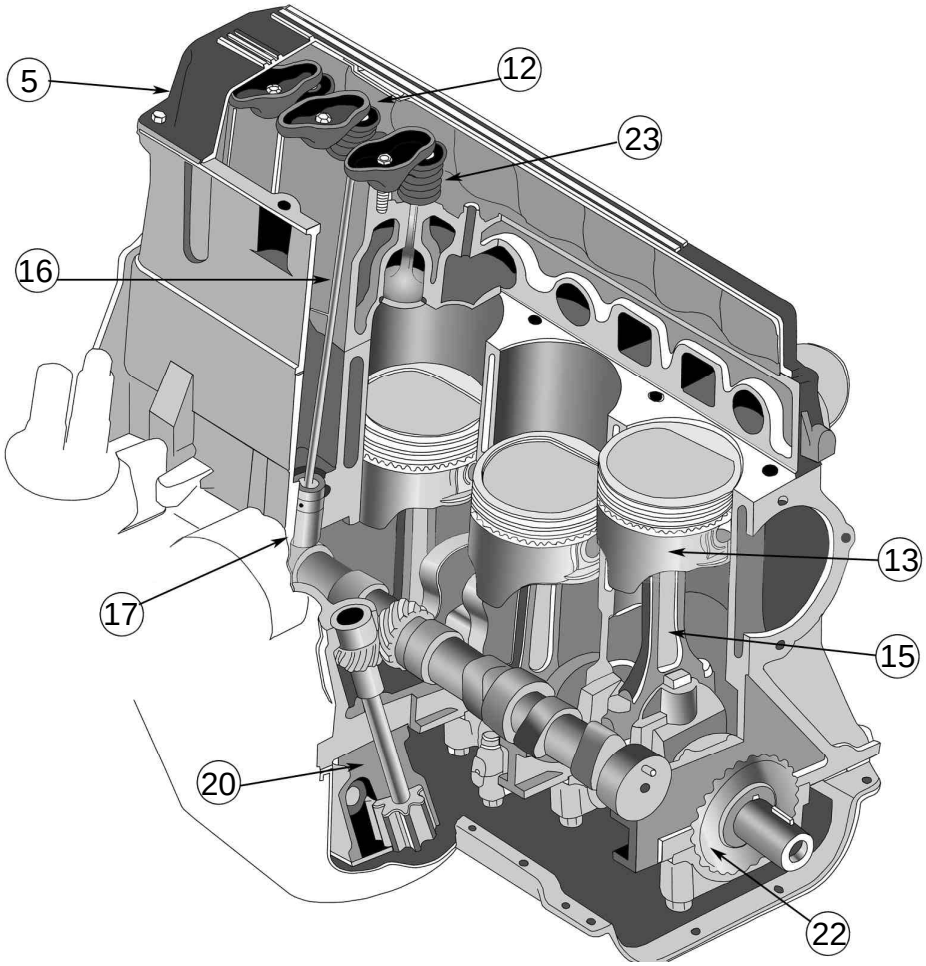

© 2003 Projekt 4x4

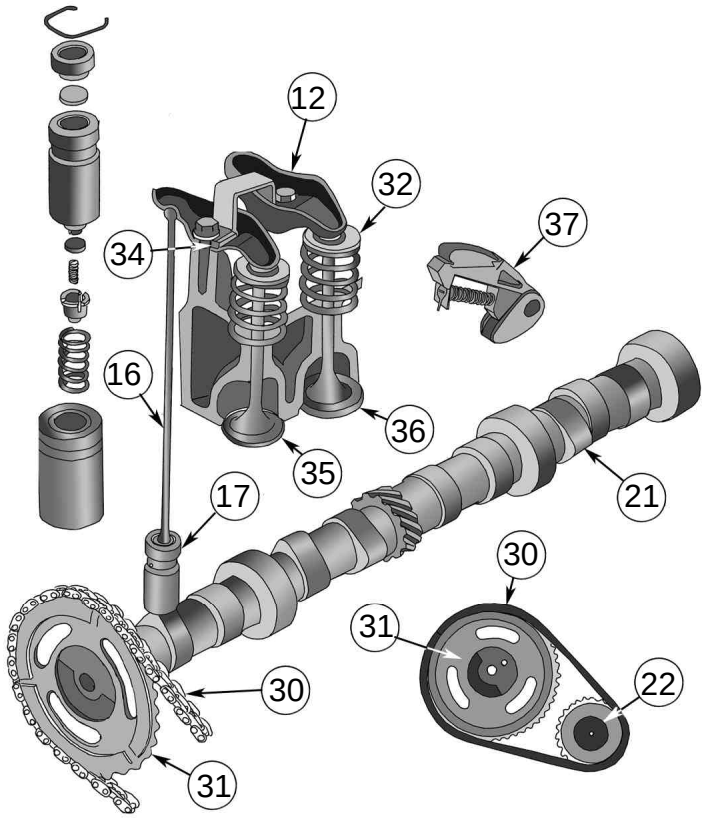

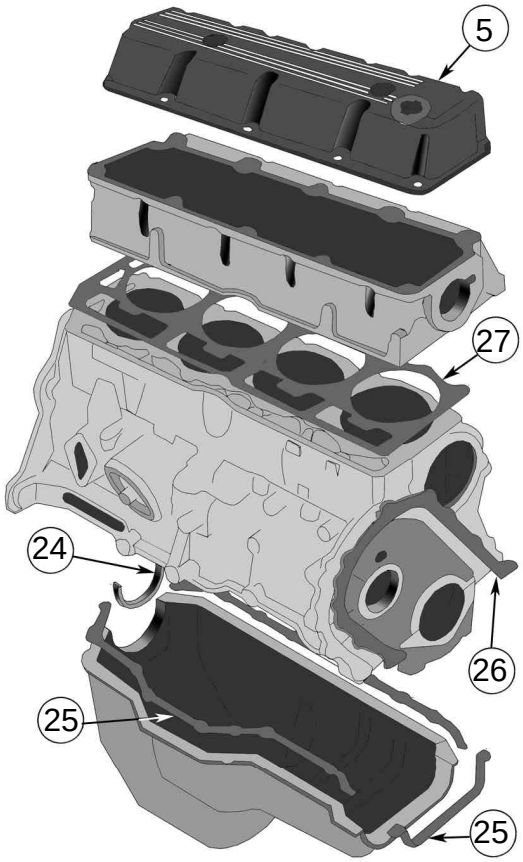

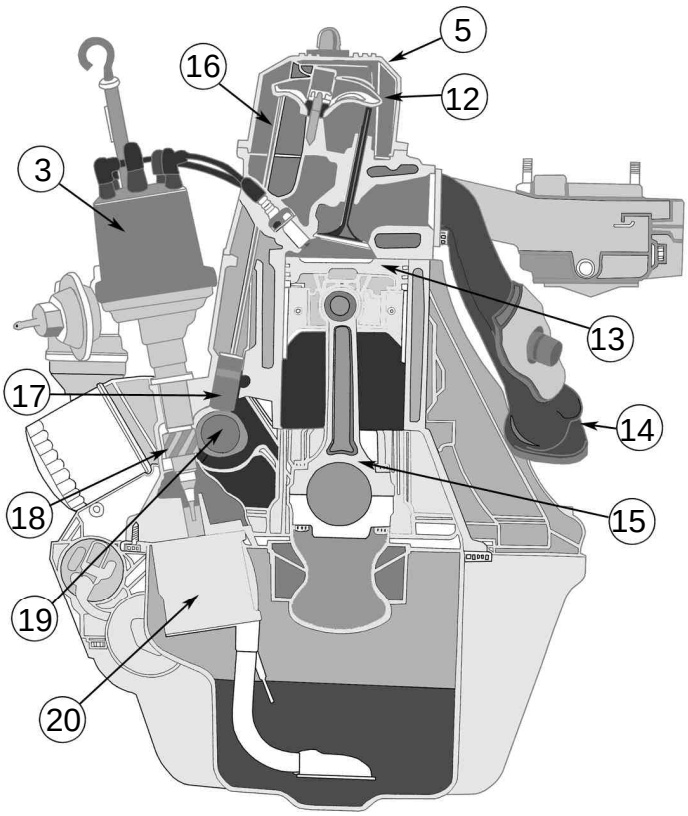

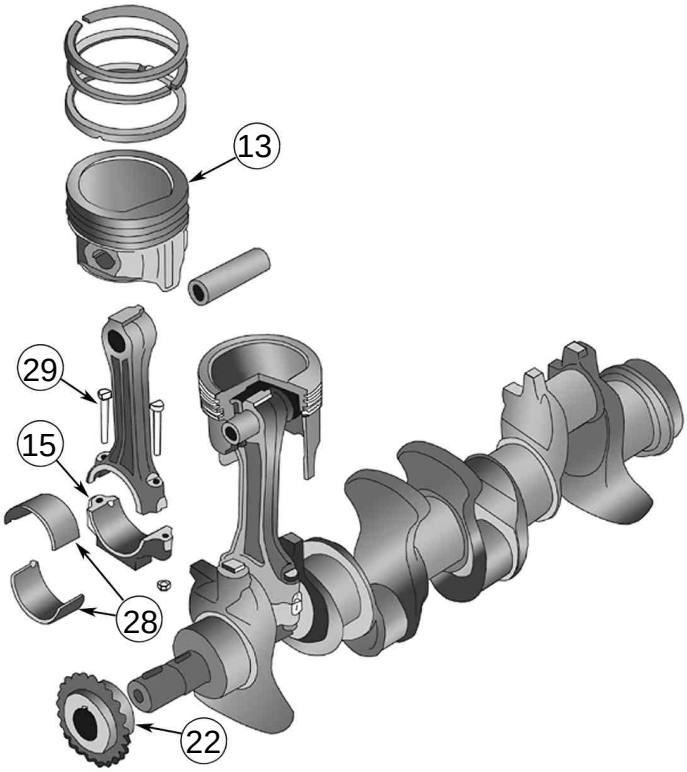

© 2003 Projekt 4x4

INDEX:

NO.	DESCRIPTION	NO.	DESCRIPTION
1.	Oil filter	22.	crankshaft sprocket
2.	Fuel pump (carbureted only)	23.	valve spring
2A.	Fuel pump in-line filter	24.	seal
3.	Distributor	25.	oil pan seal kit
3A.	Distributor cap	26.	timing cover gasket
3B.	Distributor rotor	26A.	timing cover gasket package
4.	Wire set	26B.	timing cover seal
5.	Valve cover	26C.	timing cover
6.	Cap	27.	cylinder head gasket
7.	Thermostat	27A.	upper engine gasket set
8.	Fan	27B.	lower engine gasket set
9.	Tempatrol (AKA Fan drive)	28.	connecting rod bearing
10.	Water pump	28A.	main bearing package
11.	Alternator	28B.	thrust bearing package
12.	Rocker arm	29.	connecting rod bolt
13.	Piston	30.	timing chain
13A.	Piston ring set	31.	camshaft sprocket
14.	Exhaust manifold	32.	keeper
14A.	Exhaust manifold gasket	33.	rocker arm bridge
15.	Connecting rod	34.	rocker arm pivot
16.	Push rod	35.	exhaust valve
17.	Tappet	35A.	exhaust valve seal
18.	Starter	36.	intake valve
19.	Camshaft	36A.	intake valve seal
19A.	Cam bearing	37.	tensioner
20.	Oil pump	38.	ring gear

2.5L ENGINE:

NO.	DESCRIPTION	REPLACES PART #
1.	Oil filter (1987-90)	33004195
	Oil filter (1991-96)	5281090
	Oil filter (1987-96) Export	33004195
2.	Fuel pump w/ carb.	33002652
2A.	Fuel pump in-line filter (1987-90) w/ YJ	8129383 (NP)
	Fuel pump in-line filter (1987-90) w/ XJ	83500998 (NP)
3.	Distributor (1987-90) w/ EFI	33004461
	Distributor (1991-93) w/ MPI	53006151
	Distributor (1994-96) w/ MPI	56027027
	Distributor (1987-93) w/ carb.	33004654
3A.	Distributor cap (1987-93) w/ carb. & EFI	3234451 (NP)
	Distributor cap (1991-96) w/ MPI	53006152 (NP)
3B.	Distributor rotor (1987-93) w/ carb. & EFI	33004795 (NP)

© 2003 Projekt 4x4

	Distributor rotor (1991-93) w/ MPI	33003389 (NP)
	Distributor rotor (1994-96) w/ MPI	56027019 (NP)
4.	Wire set (1987-90)	83502400
	Wire set (1991-96)	83507180
5.	Valve cover (1987-93) w/ carb	33003857
6.	Cap (1987-93)	33001016
7.	Thermostat (1987-96)	83501426
9.	Tempatrol (1987-90) w/ YJ	3241857
	Tempatrol (1987-90) w/ XJ	3241858
	Tempatrol (1991-96)	3241858
10.	Water pump (1987-90) w/ Serp.	83502938
	Water pump (1987-90) w/o Serp.	83502937
	Water pump (1991-96)	4626054
11.	Alternator (1987-90) 61-74 amp	53003802
	Alternator (1987-90) 61-74 amp tagged 1171, 2	53004264
	Alternator (1991-96) 90 amp	56005685
12.	Rocker arm (1987-90)	3242393
	Rocker arm (1991-96)	4778743
13.	Piston (1987-90)	83500251
13A.	Piston ring set (1987-93), Std. (1 piston)	83501987 (NP)
	Piston ring set (1987-93), .010 (1 piston)	83501988 (NP)
14A.	Gasket, exhaust manifold (1987-90)	3242854 (NP)
	Gasket, exhaust manifold (1991-96)	53020112 (NP)
15.	Connecting rod (1987-90)	33004545
16.	Push rod (1987-96)	3241709
17.	Tappet (1987-93)	3222276
	Tappet (1994-96)	3189883
18.	Starter (1987-90)	83503480
	Starter (1991-93)	53002125
	Starter (1994-96)	4796981
19.	Camshaft (1987-90)	83500249
	Camshaft (1991-93)	83507203
19A.	Cam bearing, Std.	3205711 (NP)
	Cam bearing, .010	3208985 (NP)
20.	Oil pump (1987-90)	3241302
	Oil pump (1991-96)	3241399
22.	Crankshaft sprocket	33004020
24.	Seal (1987-90)	3241609
	Seal (1991-93)	33004732
	Seal (1994-96)	3243116
25.	Oil pan seal kit (1987-90)	83504661
	Oil pan seal kit (1991-96)	4713021
26.	Timing cover gasket (1987-90)	3225187
26A.	Timing cover gasket package (1987-90)	8129097 (NP)
26B.	Timing cover seal (1987-00)	33004681 (NP)
26C.	Timing cover (1987)	33002984 (NP)
	Timing cover (1988-90)	53005769 (NP)

© 2003 Projekt 4x4

	Timing cover (1991-93)	53020233 (NP)
27.	Cylinder head gasket (1987-90)	33003722
	Cylinder head gasket (1991-96)	53009549
27A.	Upper engine gasket set (1987-93)	83504346 (NP)
27B.	Lower engine gasket set (1987-89)	83504647 (NP)
	Lower engine gasket set (1990-91)	83505399 (NP)
	Lower engine gasket set (1992-00)	4713023 (NP)
28.	Connecting rod bearing (1987-90)	33004545
28A.	Main bearing package (1987-90) Offset tabs	8133252 (NP)
	Main bearing set complete	8133252K4
	Main bearing package (1987-00) Centered tabs	83507079 (NP)
	Main bearing package (1987-00) .010	83507083 (NP)
28B.	Thrust bearing package (1987-90)	8133253 (NP)
	Thrust bearing package (1991-00)	83507084 (NP)
29.	Connecting rod bolt (1987-90)	4486626
30.	Timing chain	3242300
31.	Camshaft sprocket	3242280
32.	Keeper	33003521
33.	Rocker arm bridge	3236513
34.	Rocker arm pivot	3235090
35.	Exhaust valve (1987-90)	33003860
	Exhaust valve (1991-96)	4637537
35A.	Exhaust valve seal (1987-93)	33002522 (NP)
	Exhaust valve seal (1994-96)	53009887 (NP)
36.	Intake valve	33003515
36A.	Intake valve seal (1987-93)	33002729 (NP)
	Intake valve seal (1994-96)	53009886 (NP)
37.	Tensioner	33003421
38.	Ring gear	3241718

4.0L ENGINE:

NO.	DESCRIPTION	REPLACES PART #
1.	Oil filter (1987-90)	33004195
	Oil filter (1991-96)	5281090
2.	Fuel pump w/ carb.	33002652
3.	Distributor (1991-93)	53006150
	Distributor (up to 11/94)	4723067
	Distributor (aft. 11/94)	56027028
3A.	Distributor cap (1987-93)	33004024 (NP)
	Distributor cap (1994-96)	56026876 (NP)
3B.	Distributor rotor (1987-93)	56027075 (NP)
	Distributor rotor (1994-96)	56027019 (NP)
4.	Wire set (1987-90)	83300156
	Wire set (1991-96)	83507178
6.	Cap (1987-90)	33001016

© 2003 Projekt 4x4

	Cap (1994-96)	53020554
7.	Thermostat (1987-96)	83501426
9.	Tempatrol (1987-93)	52003205
	Tempatrol (1994-96) w/ YJ	4637575
	Tempatrol (1994-96) w/ ZJ w/ max cooling	52027823
10.	Water pump (1987-90)	83503407
	Water pump (1991-96) w/ XJ, YJ	4626215
	Water pump (1993-96) w/ ZJ	4626054
11.	Alternator (1987-90)	53002897
	Alternator (1991-96)	56005685
12.	Rocker arm (1991-93)	3242393
13.	Piston (1987-93)	83500251
13A.	Piston ring set (1987-93) Std. (1 piston)	83501987
	Piston ring set (1987-90) .010 (1 piston)	83501988
	Piston ring set (1991-93) .010 (1 piston)	4713210
14.	Exhaust manifold (1987-90)	53006244
	Exhaust manifold (1991-96)	33007072
14A.	Gasket, exhaust manifold (1987-90)	53020122 (NP)
	Gasket, exhaust manifold (1991-93)	33007128 (NP)
	Gasket, exhaust manifold (1994-96)	53010238 (NP)
15.	Connecting rod (1987-90)	33004545
	Connecting rod (1991-93)	53020126
16.	Push rod (1987-96)	33002986
17.	Tappet (1987-93)	3222276
	Tappet (1994-96)	3189883
18.	Starter (1987-93)	33002709
	Starter (1994-96)	56027317
19.	Camshaft (1987-93)	83503402
	Camshaft (1994-95)	33002981
19A.	Cam bearing	3205711 (NP)
20.	Oil pump (1987-90)	33002921
	Oil pump (1991-96)	3241399
22.	Crankshaft sprocket (1987-93)	33002979
	Crankshaft sprocket (1994-96)	53020443
23.	Valve spring (1987-90)	3242678
24.	Seal (1987-90)	3177635
25.	Oil pan seal kit (1987-90)	83504662
	Oil pan seal kit (1991) 4-piece	4713224
	Oil pan seal kit (1992-96) 1 piece	53007568
26.	Timing cover gasket (1987-91)	3225187
26A.	Timing cover gasket package (1987-91)	8129097 (NP)
26B.	Timing cover seal (1987-00)	33004681 (NP)
26C.	Timing cover (1987)	33002984 (NP)
	Timing cover (1988-90)	53005769 (NP)
	Timing cover (1991)	4720223 (NP)
	Timing cover (1992)	53020233 (NP)
27.	Cylinder head gasket (1987-90)	33004447

© 2003 Projekt 4x4

	Cylinder head gasket (1991-95)	53020219
27A.	Upper engine gasket set (1987-90)	83505141 (NP)
	Upper engine gasket set (1991-00)	4636982 (NP)
27B.	Lower engine gasket set (1987-91)	83505389 (NP)
	Lower engine gasket set (1992-00) 1-piece	4713221 (NP)
	Lower engine gasket set (1993-00)	4740008 (NP)
28.	Connecting rod bearing (1987-96) Std.	83500300
	Connecting rod bearing (1987-96) Std. (set of 6)	83500300R6
	Connecting rod bearing (1991-96) .010	83500301
	Connecting rod bearing (1991-96) .010 (set of 6)	83500301R6
28A.	Main bearing package (1987-90) Offset tabs	8133252
	Main bearing set complete	8133252K6
	Main bearing package (1987-00) Centered tabs	83507079 (NP)
	Main bearing package (1987-00) .010	83507083 (NP)
28B.	Thrust bearing package (1987-90)	8133253 (NP)
	Thrust bearing package (1991-00)	83507084 (NP)
30.	Timing chain (1987-93)	33002977
	Timing chain (1994-96)	53020444
31.	Camshaft sprocket (1987-93)	33002978
	Camshaft sprocket (1994-96)	53020445
32.	Keeper	33003521
33.	Rocker arm bridge	3236513
34.	Rocker arm pivot	3235090
35.	Exhaust valve (1987-90)	33003860
	Exhaust valve (1991-96)	4637537
35A.	Exhaust valve seal (1987-93)	33002522 (NP)
	Exhaust valve seal (1994-96)	53009887 (NP)
36.	Intake valve	33003515
36A.	Intake valve seal (1987-93)	33002729 (NP)
	Intake valve seal (1994-96)	53009886 (NP)
37.	Tensioner	33003421
38.	Ring gear	3179741 (NP)

4.2L AMC ENGINE:

NO.	DESCRIPTION	REPLACES PART #
1.	Oil filter (1981-86)	3242397
	Oil filter (1987-90)	33004195
2.	Fuel pump (1981-86)	3228191
	Fuel pump (1987-90) rear inlet fitting	3228191
	Fuel pump (1987-90) front inlet fitting	3240172
2A.	Fuel pump in-line filter	8129383 (NP)
3.	Distributor (1981-86)	3235141
	Distributor (1987-90)	33004655
3A.	Distributor cap (1981-90)	3230457 (NP)
3B.	Distributor rotor (1981-90)	3230821 (NP)

© 2003 Projekt 4x4

4.	Wire set (1981-86)	8134371
	Wire set (1987-90)	83300088
6.	Cap (1981-90)	33001016
7.	Thermostat (1981-90)	83501426
9.	Tempatrol (1981-86)	5362170
	Tempatrol (1987-90) w/ serp.	3241858
	Tempatrol (1987-90) w/o serp.	3241857
10.	Water pump (1981-86) w/ serp.	8134321
	Water pump (1981-86) w/o serp.	8134320
	Water pump (1987-90) w/ serp.	83502938
	Water pump (1987-90) w/o serp.	83502957
11.	Alternator (1981-86) 42-56-63-78 amp	8134663
	Alternator (1987-90) 55-66-78 amp	8134664
12.	Rocker arm (1981-82)	3223888
	Rocker arm (1983-90)	3242393
13.	Piston (1981-90)	8134441
13A.	Piston ring set (1981-86) Std.	8121683 (NP)
	Piston ring set (1981-86) .010	8121684 (NP)
	Piston ring set (1987-90) Std.	83506383 (NP)
	Piston ring set (1987-90) .010	83506384 (NP)
14.	Exhaust manifold (1972-79)	8124999
	Exhaust manifold (1981-86)	3237427
	Exhaust manifold (1987-90)	3237426
14A.	Gasket, exhaust manifold (1972-80)	3216643 (NP)
	Gasket, exhaust manifold (1981-86)	3237775 (NP)
	Gasket, exhaust manifold (1987-90)	3242855 (NP)
15.	Connecting rod (1981-90)	3237812
16.	Push rod (1981-88)	3242395
17.	Tappet (1981-90)	3222276
18.	Starter (1981-90)	5752791
19.	Camshaft (1981-90)	8133009
19A.	Cam bearing	3205711
	Cam bearing .010	3208985
20.	Oil pump (1981-90)	3242141
22.	Crankshaft sprocket (1981-86)	3173205
	Crankshaft sprocket (1987-90)	33004107
25.	Oil pan seal kit (1981-90)	83504662
26.	Timing cover gasket (1981-90)	3225187
26A.	Timing cover gasket package (1981-90)	8129097 (NP)
26B.	Timing cover seal (1981-90)	33004681 (NP)
26C.	Timing cover (1981-86)	3225186 (NP)
	Timing cover (1987-90)	53005769 (NP)
27.	Cylinder head gasket (1981-90)	3228469
27A.	Upper engine gasket set (1981-85)	8133352
	Upper engine gasket set (1986-90)	83502384
27B.	Lower engine gasket set (1981-86)	8133353
	Lower engine gasket set (1987-90)	83505389

© 2003 Projekt 4x4

28.	Connecting rod bearing (1981-90) Std.	8126204
	Connecting rod bearing (1981-90) .001	8126205
	Connecting rod bearing (1981-90) .010	8126207
28A.	Main bearing package, Std.	8133252
	Main bearing set, complete	8133252K6
	Main bearing package, .001	8133680
	Main bearing package, .002	8133682
	Main bearing package, .010	8133254
28B.	Thrust bearing package, Std.	8133253
	Thrust bearing package, .001	8133681
	Thrust bearing package, .002	8133683
	Thrust bearing package, .010	8133255
30.	Timing chain (1981-86)	3172307
	Timing chain (1987-90)	3240502
31.	Camshaft sprocket	3206693
32.	Keeper	3180458
33.	Rocker arm bridge (1981-86)	3237851
	Rocker arm bridge (1987-90)	3236513
34.	Rocker arm pivot	3235090
35.	Exhaust valve (1981-86) Std.	3237464
	Exhaust valve (1987-90) Std.	3240764
	Exhaust valve (1981-90) .003	3240163
	Exhaust valve (1981-90) .015	3240164
36.	Intake valve (1981-86) Std.	3237465
	Intake valve (1987-90) Std.	3240768
	Intake valve (1981-90) .003	3240166
	Intake valve (1981-90) .015	3240167
38.	Ring gear	3179741 (NP)
38A.	Flex plate	3232138 (NP)

5.2L & 5.9L AMC ENGINE:

NO.	DESCRIPTION	REPLACES PART #
1.	Oil filter (1974-82)	8993146
	Oil filter (1983-86)	3242397
	Oil filter (1987-91)	33004195
2.	Fuel pump	3228195
2A.	Fuel pump in-line filter	8129383 (NP)
3.	Distributor (1974-86)	3237198
	Distributor (1987-91)	3233174
3A.	Distributor cap (1974-91)	3230757 (NP)
3B.	Distributor rotor (1974-91)	3230765 (NP)
4.	Wire set (1974-86)	8129048
	Wire set (1987-91)	83300090
6.	Cap	3220248
7.	Thermostat	8127383

© 2003 Projekt 4x4

9.	Tempatrol	5362722
10.	Water pump	3234427
11.	Alternator (1974-86) 42-56-63-78 amp	8131881
	Alternator (1987-90) 42-56-78 amp	8134663
12.	Rocker arm (1974-86)	3223539
	Rocker arm (1987-91)	3210177
13.	Piston (5.2L)	4487564
13A.	Piston ring set, Std. (5.2L)	8121685 (NP)
	Piston ring set, .010 (5.2L)	8121686 (NP)
14.	Exhaust manifold, Right	8121274
	Exhaust manifold, Left	8122442
14A.	Gasket, exhaust manifold	3237270 (NP)
16.	Push rod	3214014
17.	Tappet (1981-90)	3222276
18.	Starter (1974-86)	5752791
	Starter (1987-91)	33002709
19.	Camshaft (5.9L)	4486476
	Camshaft (5.2L)	8121156
19A.	Cam bearing	4486286 (NP)
20.	Oil pump repair kit	3184086K
22.	Crankshaft sprocket (1974-91) .50” wide	3234235
	Crankshaft sprocket (1974-86) .62” wide	3223199
25.	Oil pan seal kit	3206690
26.	Timing cover gasket	3180216
26A.	Timing cover gasket package	8129098 (NP)
26B.	Timing cover seal	3193613 (NP)
26C.	Timing cover	8129373 (NP)
27.	Cylinder head gasket (1974-81)	3219846
	Cylinder head gasket (1982-91)	3227352
27A.	Upper engine gasket set	8128192 (NP)
27B.	Lower engine gasket set	8125727 (NP)
28.	Connecting rod bearing , Std.	8126204
	Connecting rod bearing, .001	8126205
	Connecting rod bearing, .010	8126207
28B.	Thrust bearing package, Std.	8125933
30.	Timing chain (1981-91), .50” wide	3234433
	Timing chain (1981-86), .62” wide	8134433
31.	Camshaft sprocket (1981-91), .50” wide	3234234
	Camshaft sprocket (1981-86), .62” wide	3197138
32.	Keeper (1974-81)	3180458
	Keeper (1982-91)	3156157
33.	Rocker arm bridge	3236513
34.	Rocker arm pivot	3235090
35.	Exhaust valve (5.9L)	3224598
	Exhaust valve (5.2L)	3237464
36.	Intake valve (5.9L)	3229657
	Intake valve (5.2L)	3237465
38.	Ring gear	3179741 (NP)
38A.	Flex plate w/ 727 trans.	3232139 (NP)

© 2003 Projekt 4x4

5.2L ENGINE:

NO.	DESCRIPTION	REPLACES PART #
	Crankshaft oil seal	4778228 (NP)
	Crankcase inlet grommet	2946079 (NP)
1.	Oil filter	5281090
3A.	Distributor cap	53008767
3B.	Distributor rotor	53008778
4.	Wire set	4728190
6.	Cap	53020554
7.	Thermostat	4494469
9.	Tempatrol w/ max cooling	52028214
	Tempatrol w/o max cooling	52028215
10.	Water pump	53020280
11.	Alternator (1994)	53008647
17.	Tappet (1981-90)	4717349
26B.	Timing cover seal	4741908 (NP)
27.	Cylinder head gasket	53020490
32.	Keeper	33003521
35A.	Exhaust valve seal	53009887 (NP)
36A.	Intake valve seal	53009886 (NP)

© 2003 Projekt 4x4

SERPENTINE BELTS:

REPLACES PART #	MODEL	YEAR	ENGINE	DESCRIPTION
53002900	XJ	1984-90		w/o A/C
JK060817	YJ	1987		w/ PS
53001119	YJ	1988-90		w/o PS
53010010	XJ, YJ	1991-93		w/o A/C, w/o PS
53007539	XJ	1991-93	2.5L	
	YJ	1991-93		w/ A/C
53010269	XJ	1994-95	4.0L	
53031118	XJ	1994-95	2.5L	w/o A/C
53010279	XJ	1991-95	4.0L	RHD
53013014	XJ	1996-00	4.0L	
53010234	XJ	1996-00	4.0L	RHD
53010257	XJ	1997-00	2.5L	w/o A/C
	YJ	1995		w/o A/C
	TJ	1997-00	2.5L	w/o A/C
53010311	XJ	1996-00	2.5L	w/o A/C, w/ RHD
4612277	ZJ	1993	4.0L	w/ A/C
53007595	ZJ	1993	4.0L	w/o A/C
	XJ	1991-93	2.5L	w/o A/C
	YJ	1991-93		w/ A/C, w/ PS
53010284	YJ	1994		w/o A/C w/ PS
	ZJ	1994-96	4.0L	w/o A/C
53010275	ZJ	1994-95		
53011098	ZJ	1994-95	5.2L	
53011097	ZJ	1996-98	5.2L, 5.9L	
53010150	ZJ	1996-98	4.0L	
53011035	YJ	1995		w/ A/C
	XJ	1996-00	2.5L	w/ A/C
	TJ	1997-00	2.5L, 4.0L	w/ A/C, w/ PS

© 2003 Projekt 4x4